Parts Manual (EN)

Models:

28", 30″ 32" Disk
26" & 30" Cylindrical

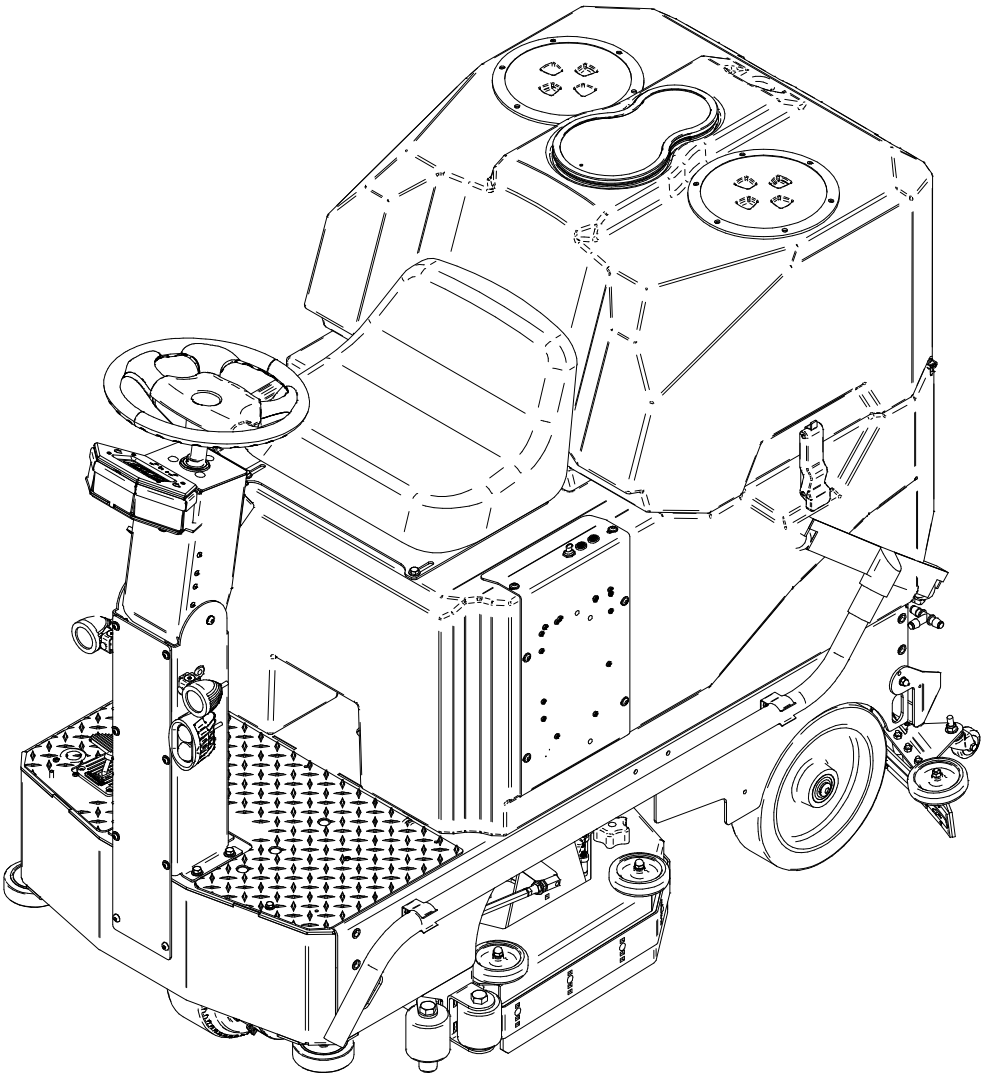



Read the Operators Manual before using the machine.



Read the Safety Messages before servicing machine.

www.timberlineclean.com
1711 South Street
Racine, WI 53404 (USA)
1-855-965-0011
© 2023 RPS Corporation

V26.322
TL-RIDER-M-V2-P-EN

CONTENTS

SQUEEGEE LINKAGE 5
REAR AXLE & LINKAGE ASSEMBLY 7
FRONT WHEEL DRIVE 9
FRONT WHEEL DRIVE ASSEMBLY 11
STEERING UPRIGHT 13
TOP STEERING UPRIGHT. 15
MEMBRANE DASH BOARD. 17
TOUCH SCREEN DASH 19
STEERING SHAFT ASSEMBLY 21
28", 30" & 32" DISK DECK 23
DISK DECK SHROUDS 25
26" & 30" CYLINDRICAL DECK. 27
26" & 30" CYLINDRICAL DECK. 29
26" & 30" CYLINDRICAL WIPER 31
26" & 30" CYLINDRICAL DECK DOOR 33
MEMBRANE CENTERAL COMMAND PANNEL 35
TOUCH SCREEN CENTERAL COMMAND 37
RECOVERY TANK ASSEMBLY. 39
SOLUTION TANK ASSEMBLY. 41
TANK UTILITY HANDLE 43
SQUEEGEES. 45
BATTERY AND CHARGER OPTIONS 47
BATTERY CHARGERS. 49
SCHEMATIC 50

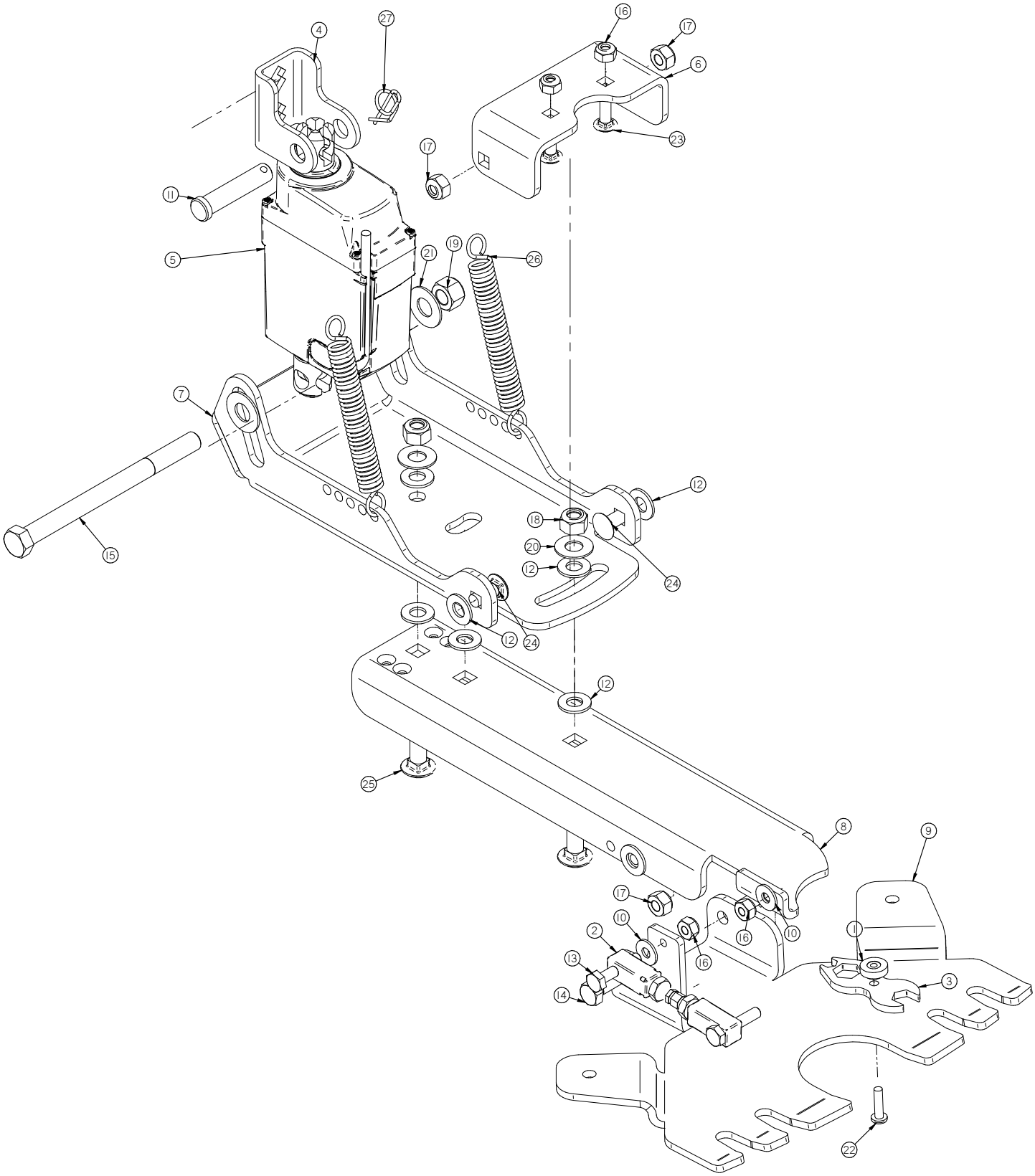
16
17
4
27
6
23
17
11
5
21
19
26
7
12
18
20
12
24
15
12
24
12
25
8
9
17
10
16
10
2
11
13
3
14
22

Item	Part No.	Part Description	Qty.
1	175-4180	YELLOW KNOB	1
2	175-8441	SQUEEGEE ADJUSTABLE LATERAL ARM	1
3	260-0001	THREE IN ONE TOOL	1
4	260-1006	LIFTING BRACKET	1
5	260-2240D	2" STROKE ACTUATOR (24V 900Nm)	1
6	500-1264	SQUEEGEE ARM BRACKET	1
7	500-7145	SQUEEGEE LIFT PLATE	1
8	500-7151	SQUEEGEE TRAIL ARM	1
9	650-7611	SQUEEGEE TRIANGLE PLATE	1
10	H-00283	FW 1/4" NYLON	2
11	H-0156763	.4375 X 2.0 CLEVIS	1
12	H-4440024	FW 3/8" X 3/4" NYLON	9
13	H-70007	HCS 1/4"- 20 X 1.25" SS	2
14	H-70053	HCS 5/16"- 18 X 3/4" SS	2
15	H-70174	HCS 7/16"-14 X 5-1/2" SS	1
16	H-70860	NYLOK 1/4"- 20 SS	4
17	H-70861	NYLOK 5/16" - 18 SS	4
18	H-70862	NYLOK 3/8"-16 SS	2
19	H-70863	NYLOK 7/16"-14 SS	1
20	H-71017	FW 3/8 ID X 7/8 OD SS	2
21	H-71219	FNW 7/16 ID X 1.0 OD SS	2
22	H-72534	PPH #10-32 X 3/4" S/S	1
23	H-74419	CB 1/4"- 20 X .75" SS	2
24	H-74429	CB 5/16"- 18 X 3/4" SS	2
25	H-74436	CB 3/8"- 16 X 1.0" SS	2
26	H-96544	SPRING, 4-1/8" LG, 9/16 OD, (42E)	2
27	H-RUE76	rue ring cotter .4375	1

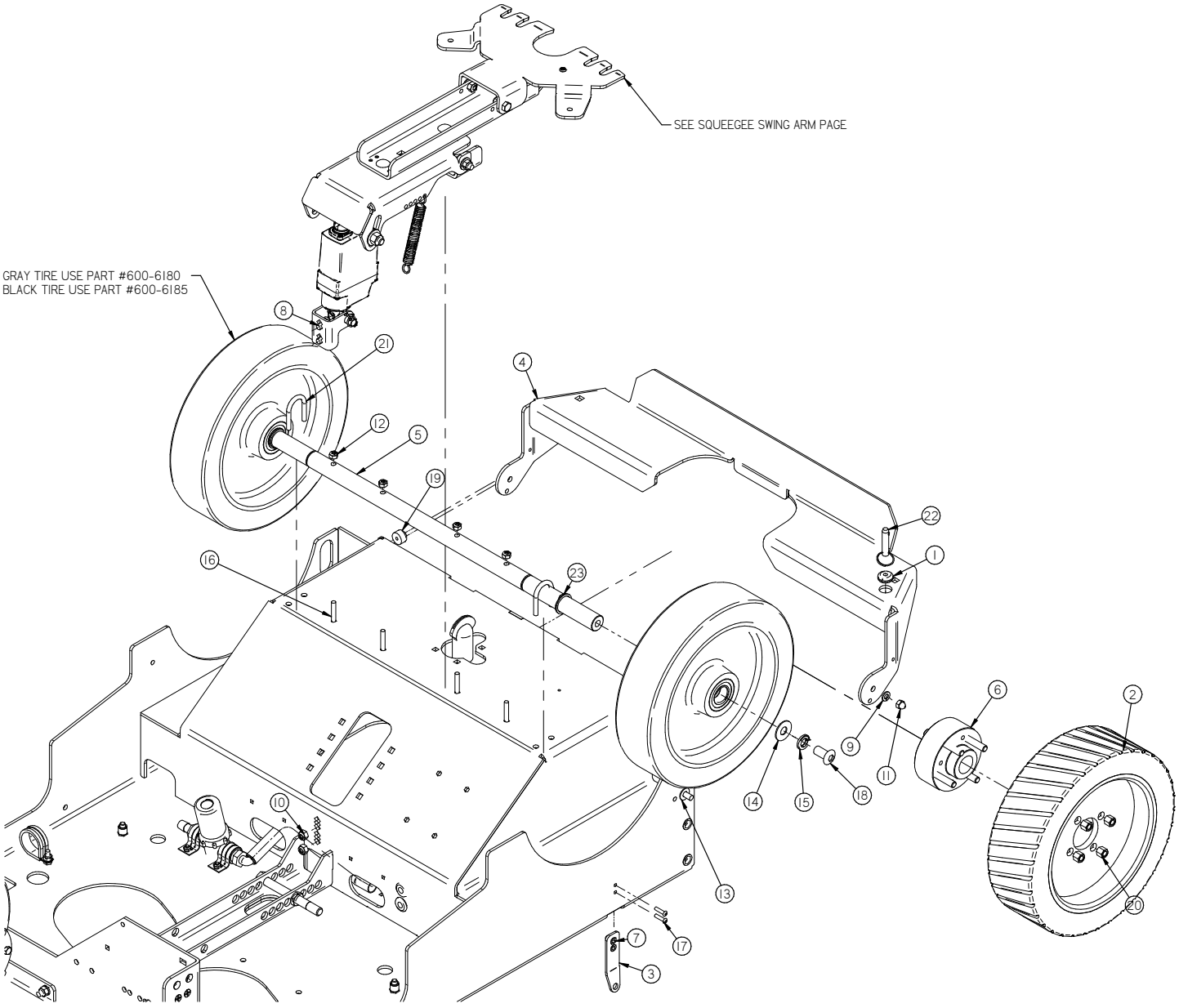
SEE SQUEEGEE SWING ARM PAGE
GRAY TIRE USE PART #600-6180
BLACK TIRE USE PART #600-6185
8
21
4
12
5
19
22
1
16
23
6
2
9
11
14
15
18
10
13
20
7
17
3

Item	Part No.	Part Description	Qty.
1	0709110	GROMMET .25 ID .625 OD	1
2	253-6195	REAR WHEEL (BLACK) TREADED	1
3	261-1241	Solid Tank Straps	1
4	290-1107	BUMPER	1
5	290-1279	AXLE	1
6	650-6173	WHEEL HUB	1
7	H-1032HCN	HCN #10-32	1
8	H-21810	CB 5/16"- 18 X 3/4" ZINC	1
9	H-33620	LW 5/16" ZINC	2
10	H-37021	NYLOK 5/16" - 18 ZINC	1
11	H-37709	5/16-18 ACORN NUT	1
12	H-70860	NYLOK 1/4"- 20 SS	9
13	H-71015	FW 5/16 ID X 3/4 OD ZINC	1
14	H-71021	FW 1/2 ID X 1-1/4 OD SS	1
15	H-71071	LW 1/2" SS	1
16	H-72712	FHP 1/4"- 20 X 1-1/4" SS	4
17	H-73745	BHSCS 10-32 X 3/4" SS	1
18	H-73834	BHSCS 1/2- 13 X 1" SS	1
19	H-9540	1/2" RUBBER BUMPER, 25/32	1
20	H-FAN6	LUG NUT 3/8"-16 SS	4
21	M-3043T13	1/4-20 X 1.0" U-BOLT	2
22	M-98404A368	DETENT RING PIN, 3/8" X .8"	1
23	M-98585A121	1 INCH EXTERNAL RETAINING RING	1

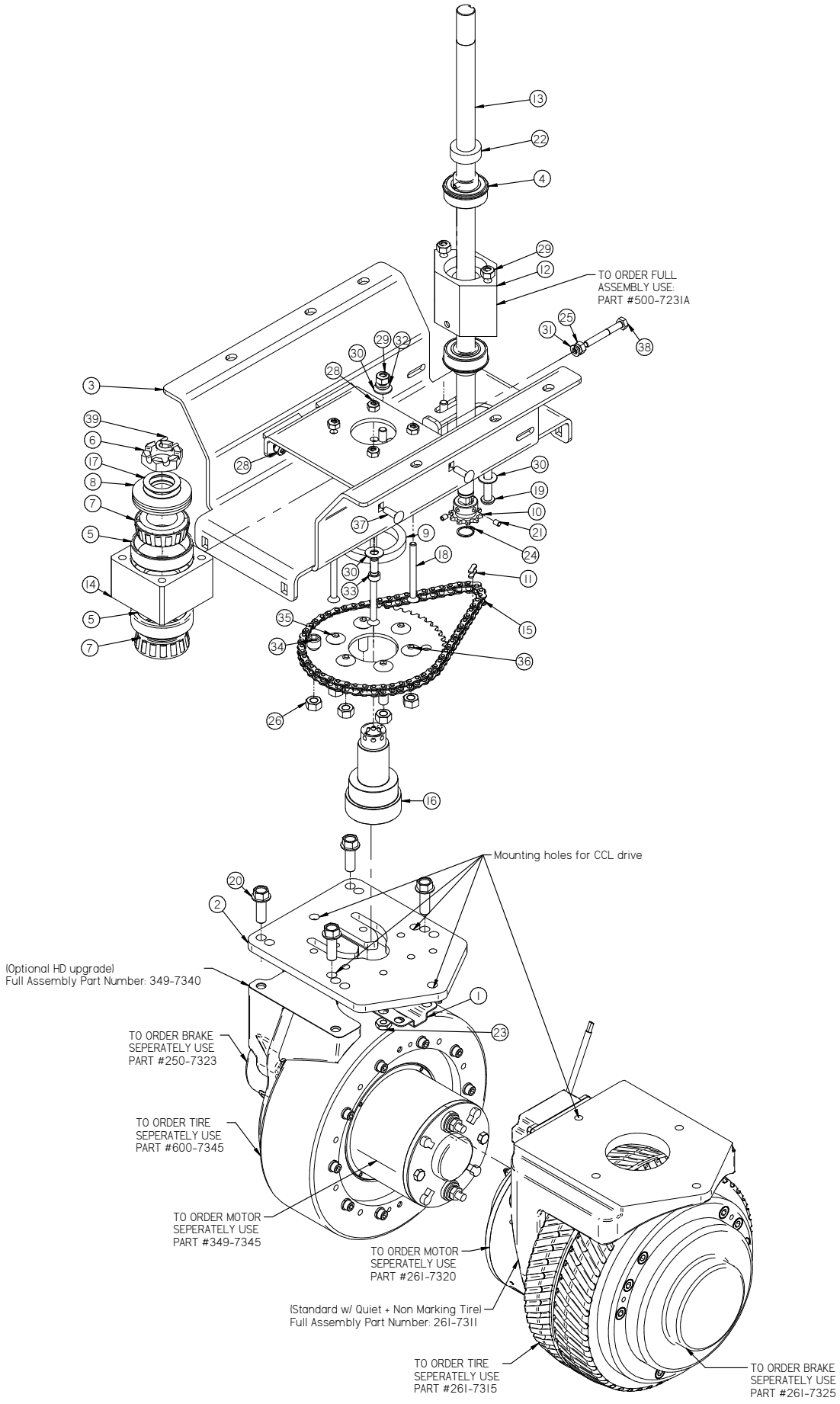
TO ORDER FULL ASSEMBLY USE: PART #500-7231A
Mounting holes for CCL drive
(Optional HD upgrade) Full Assembly Part Number: 349-7340
TO ORDER BRAKE SEPERATELY USE PART #250-7323
TO ORDER TIRE SEPERATELY USE PART #600-7345
TO ORDER MOTOR SEPERATELY USE PART #349-7345
TO ORDER MOTOR SEPERATELY USE PART #261-7320
(Standard w/ Quiet + Non Marking Tire) Full Assembly Part Number: 261-7311
TO ORDER TIRE SEPERATELY USE PART #261-7315
TO ORDER BRAKE SEPERATELY USE PART #261-7325

Item	Part No.	Part Description	Qty.
1	250-7328	WIRE GUIDE	1
2	261-7326	PIVOT PLATE (CCL)	1
3	290-7333	FRONT DRIVE DROP PLATE	1
4	349-7231	BEARING W/SET SCREW	2
5	37-7318	TAPERED BEARING CUP	2
6	37-7321	SLOTTED NUT, 2.0 - 12	1
7	370-7317	TAPERED ROLLER BEARING	2
8	370-7321	PRE LOAD SLEEVE	1
9	370-8374	BEARING SEAL	1
10	5-826	10 TOOTH SPROCKET 5/8 SHAFT	1
11	5-831	MASTER LINK	1
12	500-7231	BEARING BLOCK	1
13	600-7120	STEERING SHAFT, LOWER	1
14	600-7230	BEARING BLOCK	1
15	600-7327	60 LINK STEERING CHAIN	1
16	600-7332	STEERING SPINDLE	1
17	8-713	1 1/2" THRUST WASHER	2
18	H-0170132	FHP 1/4"- 20 X 2-3/4"	1
19	H-0171294	BHSCS 5/16-18 X 3.5	2
20	H-11115680	FB CASHD M10-1.5 X 30mm	4
21	H-25306	SSS CP #10-32 X 1/4"	3
22	H-33376	SHAFT COLLAR, 3/4" ID X 9/16 LG	1
23	H-37126	JNYL 3/8- 24 ZINC	1
24	H-68013	SNAPRING	1
25	H-70710	HN 1/4"- 20 SS	1
26	H-70712	HN 3/8"-16 SS	1
27	H-70732	HN 3/8"- 24 SS	4
28	H-70860	NYLOK 1/4"- 20 SS	5
29	H-70861	NYLOK 5/16" - 18 SS	3
30	H-71015	FW 5/16 ID X 3/4 OD SS	4
31	H-71063	LW 1/4" SS	1
32	H-71065	LW 5/16" SS	1
33	H-73494	SHCS 5/16-18 X 3/4 SS	1
34	H-73541	SHCS 3/8"- 16 X 1 1/4" SS	1
35	H-73816	BHSCS 3/8"- 16 X 1-1/4" SS	1
36	H-73818	BHSCS 3/8"- 16 X 1-3/4" S/S	2
37	H-74419	CB 1/4"- 20 X .75" SS	1
38	H-77011	HCS 1/4-20 X 2.0" SS	1

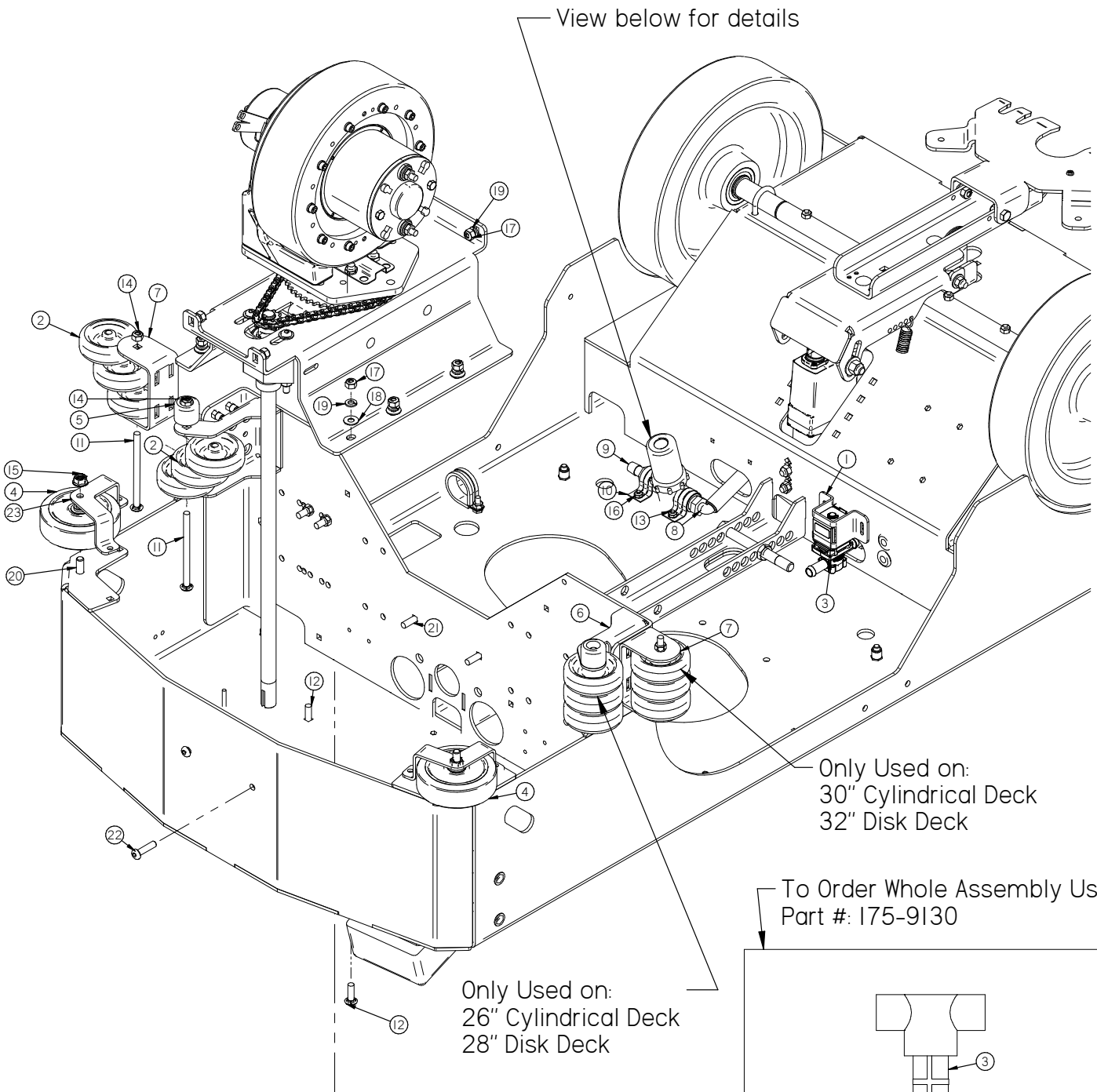

To Order Whole Assembly Use
Part #: 175-9130

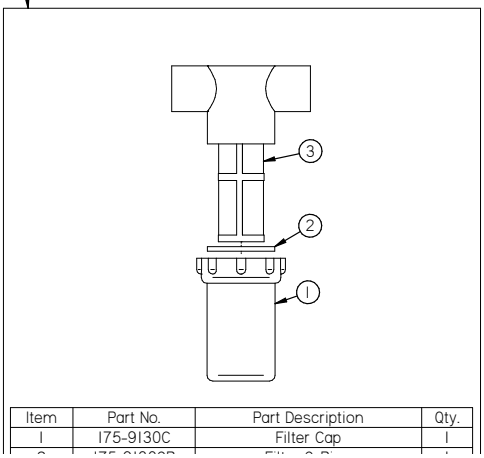

Item	Part No.	Part Description	Qty.
1	175-9130C	Filter Cap	1

Item	Part No.	Part Description	Qty.
1	150-5280	VALVE BRACKET	1
2	150-7601	3" SIDE WHEEL (GREY)	10
3	175-4500	DELTROL VALVE	1
4	190-3030	4.0" WHEEL (GRAY)	2
5	220-9764	HDPE Bumper 1" Tall	2
6	261-1028	LOWER ROLLER BRACKET	2
7	261-1126	ROLLER BRACKET	2
8	H-04764	ELBOW, 90 DEG X 1/2" MNPT X 1/2" BARB, NYLON	1
9	H-04788	.50 NPT X .50 BARB	1
10	H-0701891	3/4in Hose Tube Clamp (1in Dia)	2
11	H-21271	CB 5/16"- 18 X 4.5" ZINK	2
12	H-21811	CB 5/16"- 18 X 1" ZINC	2
13	H-29506	FHP #10-32 X 1/2" ZINC	1
14*	H-37021	NYLOK 5/16" - 18 ZINC	2
15	H-37341	Nut, Serrated Flange, 3/8-16, Zink	1
16	H-70858	NYLOK #10-32 SS	1
17	H-70861	NYLOK 5/16" - 18 SS	8
18	H-71015	FW 5/16 ID X 3/4 OD SS	4
19	H-71065	LW 5/16" SS	7
20	H-71190	HCS 3/8"- 16 X 2-1/2" SS (FULLY THREADED)	1
21	H-74430	CB 5/16"- 18 X 1" SS	1
22	H-94072	BHSCS 5/16-18 X 1-1/4" ZINK	2

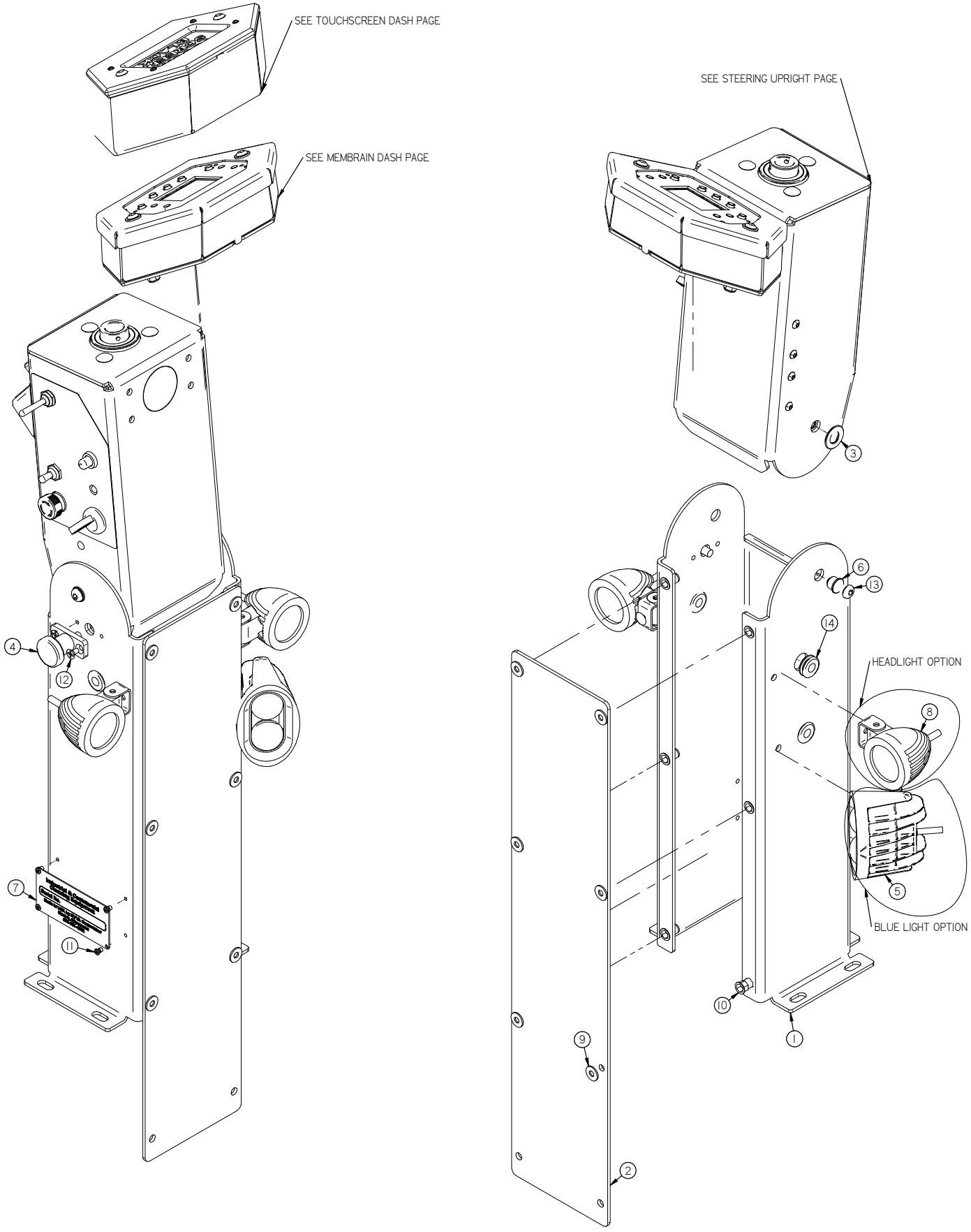
SEE TOUCHSCREEN DASH PAGE
SEE MEMBRAIN DASH PAGE
SEE STEERING UPRIGHT PAGE
HEADLIGHT OPTION
BLUE LIGHT OPTION
1
2
3
4
5
6
7
8
9
10
11
12
13
14

Item	Part No.	Part Description	Qty.
1	261-1502	STEERING TOWER	1
2	261-1509	STEERING TOWER FRONT PANNEL	1
3	290-1247	BRONZE THRUST BEARING, .50" ID X 1.0" OD X 1/16" TH	2
4	290-7050	INDEX PLUNGER	1
5	349-2910	BLUE WARNING LIGHT	1
6	370-1245	BUSHING	2
7	4-101	SERIAL NUMBER PLATE	1
8	500-2910	HEAD LIGHT	1
9	H-00283	FW 1/4" NYLON	7
10	H-250HCN	HCN 1/4"-20	6
11	H-41007	AB4-3A BLIND RIVET ALUMINUM	4
12	H-72681	FHP #10-32 X 3/8" SS	2
13	H-73780	BHSCS 5/16-18 X 1	1
14	M-9307K23	GROMMET, RUBBER 3/8 ID X 7/8 OD X 1/8 TH.	3

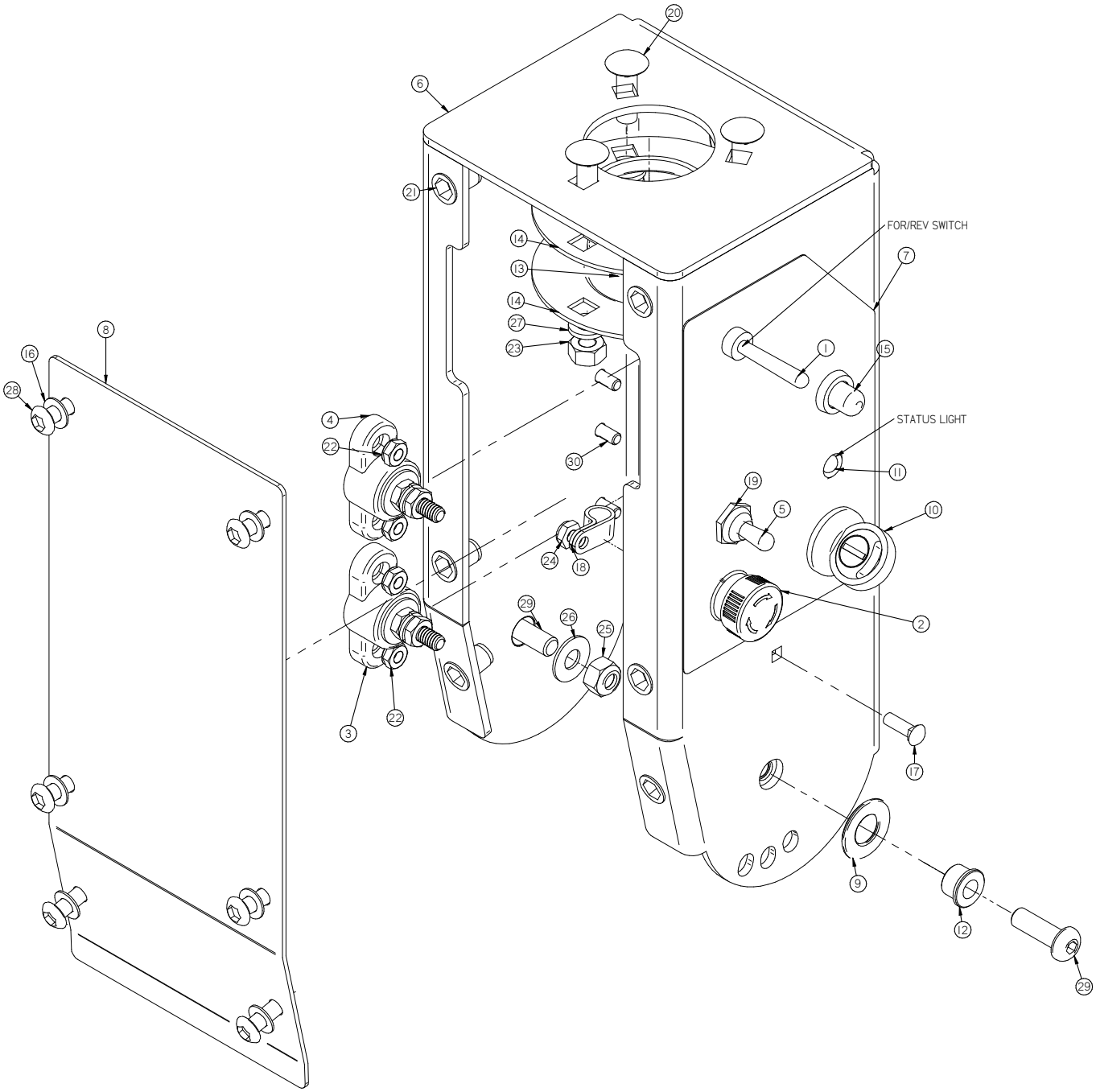
FOR/REV SWITCH
STATUS LIGHT

Item	Part No.	Part Description	Qty.
1	150-2830	SWITCH, TOGGLE, MOM/OFF/MOM (DPDT)	1
2	175-0300	Emergency stop switch, 51 series, 1C/0	1
3	175-2700	NEG INSULATOR POST (BLACK)	1
4	175-2710	POS INSULATOR POST (RED)	1
5	260-8920	TOGGLE, ON-OFF SPST	1
6	261-1501	UPPER STEERING TOWER	1
7	261-2020	TOWER DECAL	1
8	290-1172	COVER	1
9	290-1247	BRONZE THRUST BEARING, .50" ID X 1.0" OD X 1/16" TH	2
10	290-234	LOCK AND KEY	1
11	290-2350	YELLOW LIGHT	1
12	370-1245	BUSHING	2
13	4-352	BEARING	1
14	4-364A	FLANGE, 1.75" ID	2
15	8-294B	PUSH BUTTON SWITCH, SILVER	1
16	H-00282	FW 1/4" NYLON	6
17	H-0172519	CB #10-32 X 5/8" SS	1
18	H-02239	3/8" NYLON LOOP CLAMP	1
19	H-11200	PROTECTIVE BOOT, TOGGLE SWITCH, (BLACK)	1
20	H-21811	CB 5/16"- 18 X 1" ZINC	1
21	H-250HCN	HCN 1/4"-20	1
22	H-37408	KN #10-32 ZINC	4
23	H-70711	HN 5/16"- 18 SS	1
24	H-70858	NYLOK #10-32 SS	1
25	H-70861	NYLOK 5/16" - 18 SS	1
26	H-71015	FW 5/16 ID X 3/4 OD SS	2
27	H-71065	LW 5/16" SS	1
28	H-73754	BHSCS 1/4 - 20 X 3/4" SS	6
29	H-73780	BHSCS 5/16-18 X 1	2
30	H-94040	BHSCS 10-32 X .50 ZINC	1

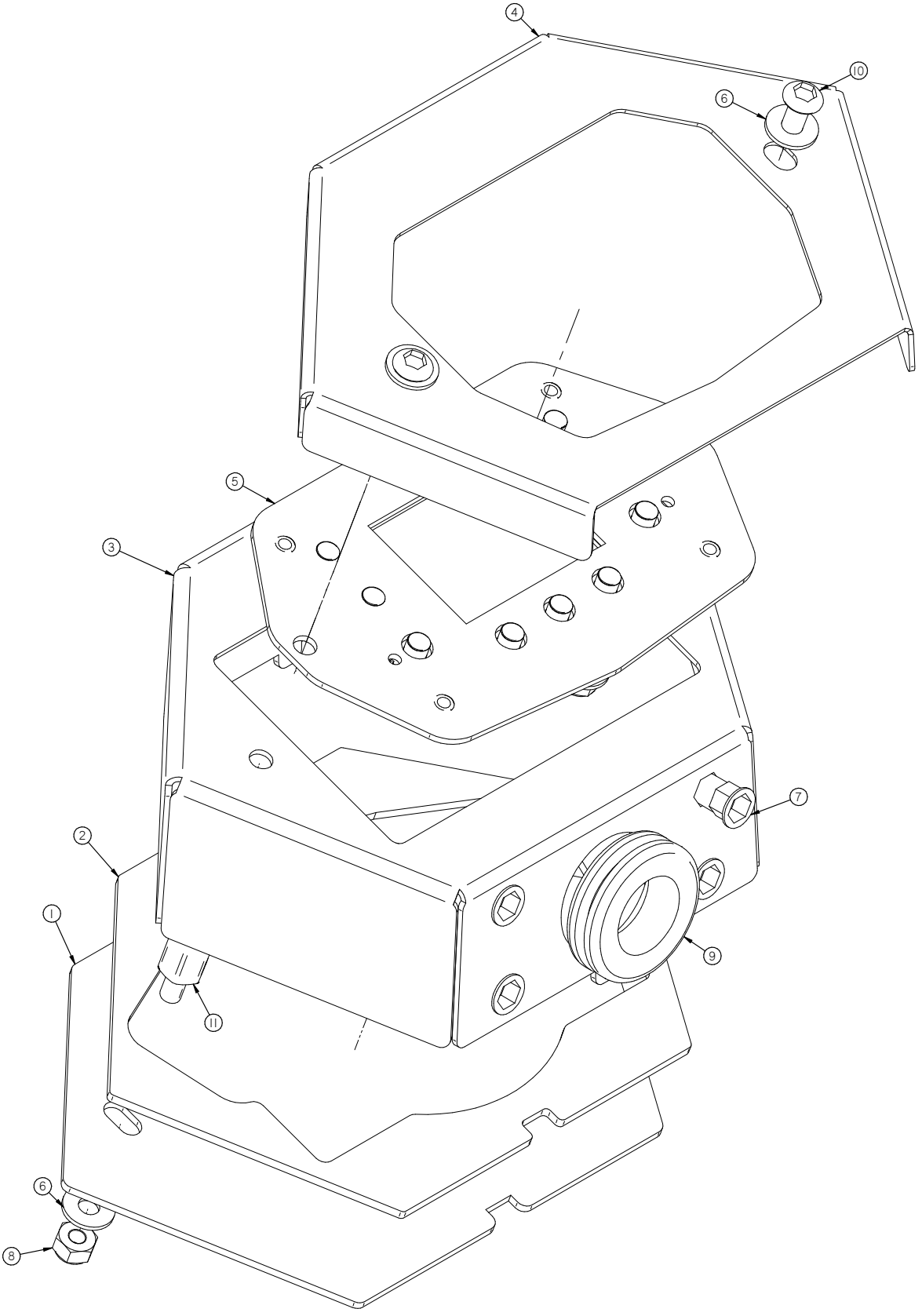
4
10
6
5
3
7
2
1
9
11
6
8

Item	Part No.	Part Description	Qty.
1	211-1505	DASH BOTTOM COVER SED Membrane	1
2	211-1507	Membrane, Touch, Guage Dash Gasket	1
3	211-9102	FRONT DASH SED MEMBRANE	1
4	211-9715	DASH MEMBRANE COVER	1
5	220-9105	Membrane DASH (DES) 3" Color LCD	1
6	H-00283	FW 1/4" NYLON	4
7	H-250HCN	HCN 1/4"-20	4
8	H-37018	NYLOK 1/4"- 20 ZINC	1
9	H-9307K74	GROMMET, 1" ID X 1-3/4" OD BUNA-N	1
10	H-94050	BHSCS 1/4 - 20 X 5/8" ZINC	2
11	M-93620A833	1/4-20 Male to 1/4-20 Female standoff 1.75in Long	1

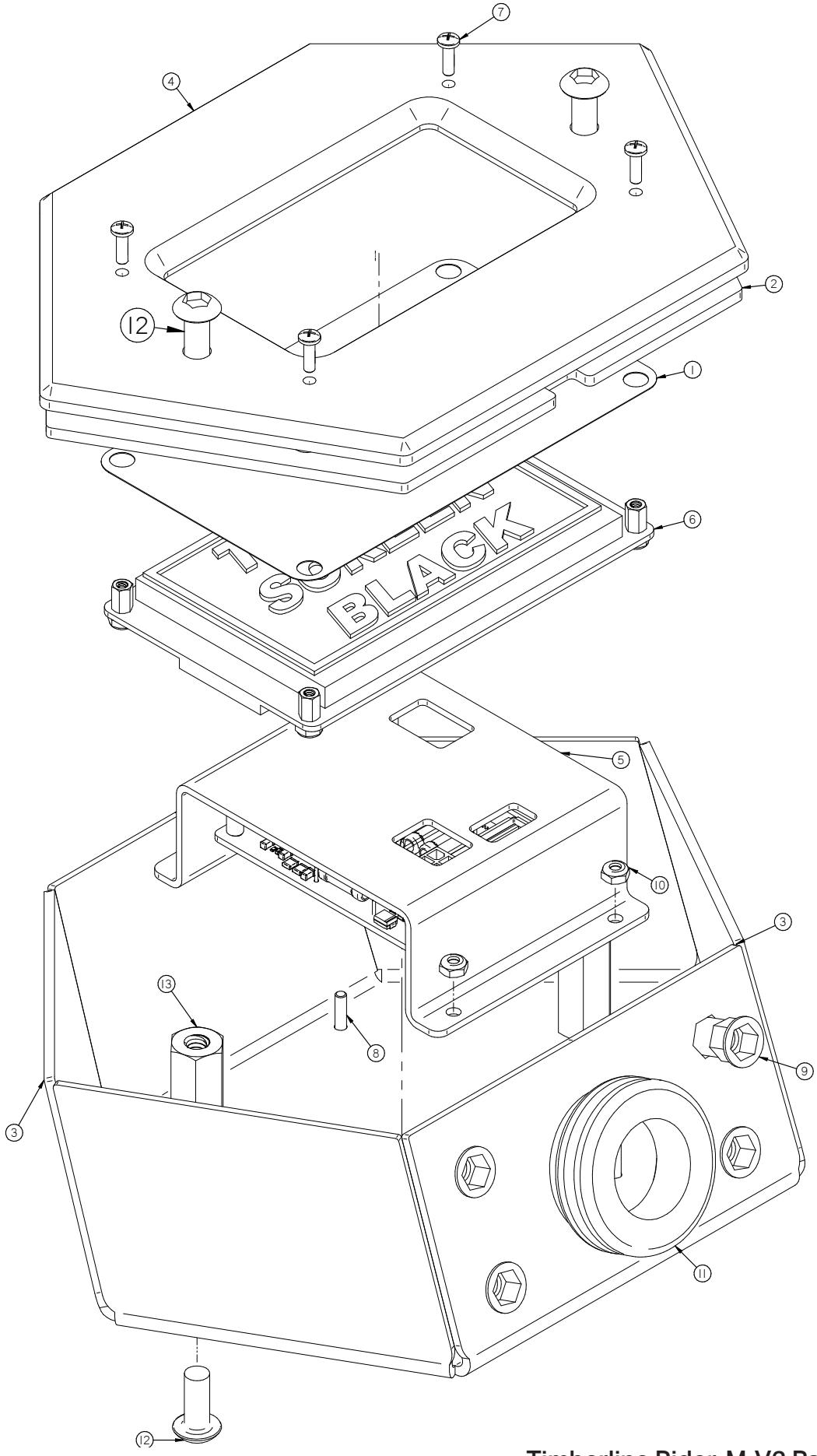
7
4
2
12
1
6
BLACK
5
10
3
13
8
9
3
11
12

Item	Part No.	Part Description	Qty.
1	175-2024	TOUCH SCREEN PROTECTOR	1
2	211-1507	Membrane, Touch, Guage Dash Gasket	1
3	261-1513	TOUCH SCREEN TUGS DASH BASE	1
4	261-1514	FRONT TOUCH SCREEN DASH	1
5	264-2891	TOUCH SCREEN CONTROLLER	1
6	264-2891	4 INCH TOUCH SCREEN (BLACK)	1
7	H-1128643	PPH #4-40 X .375 ZINC	4
8	H-1128655	PPH #4-40 X 1/2" ZINC	4
9	H-250HCN	HCN 1/4"-20	4
10	H-37006	NYLOK #4-40 ZINC	4
11	H-9307K74	GROMMET, 1" ID X 1-3/4" OD BUNA-N	1
12	H-94050	BHSCS 1/4 - 20 X 5/8" ZINC	4
13	M-92230A340	1/4-20 x 2.5in - Female Standoff ZINK	2

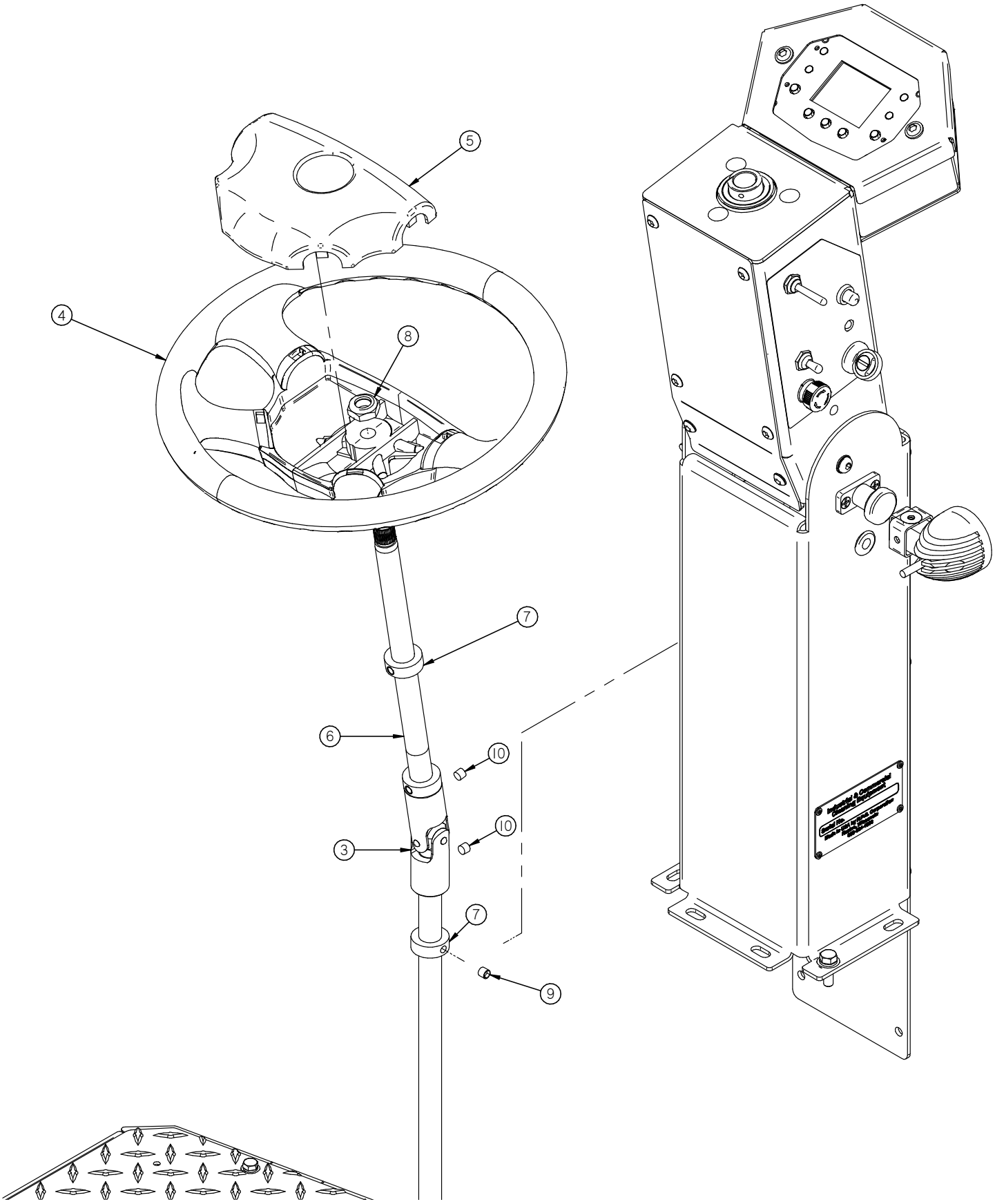
5
4
8
7
6
10
10
3
7
9

Item	Part No.	Part Description	Qty.
1	211-7430	Foot Pedal 24v	1
2	261-9721	K42 NON SKID FLOOR PLATE	1
3	290-7110	U-JOINT	1
4	650-7030	STEERING WHEEL	1
5	650-7031	STEERING WHEEL COVER	1
6	650-7090	STEERING SHAFT, UPPER	1
7	H-33376	SHAFT COLLAR, 3/4" ID X 9/16 LG	3
8	H-37038	JNYL 5/8"- 11	1
9	H-81983	5/16"-18 X 1/4" KNURL SET SCREW	3
10	H-82022	5/16-24" X 1/4" KNURL SET SCREW	4

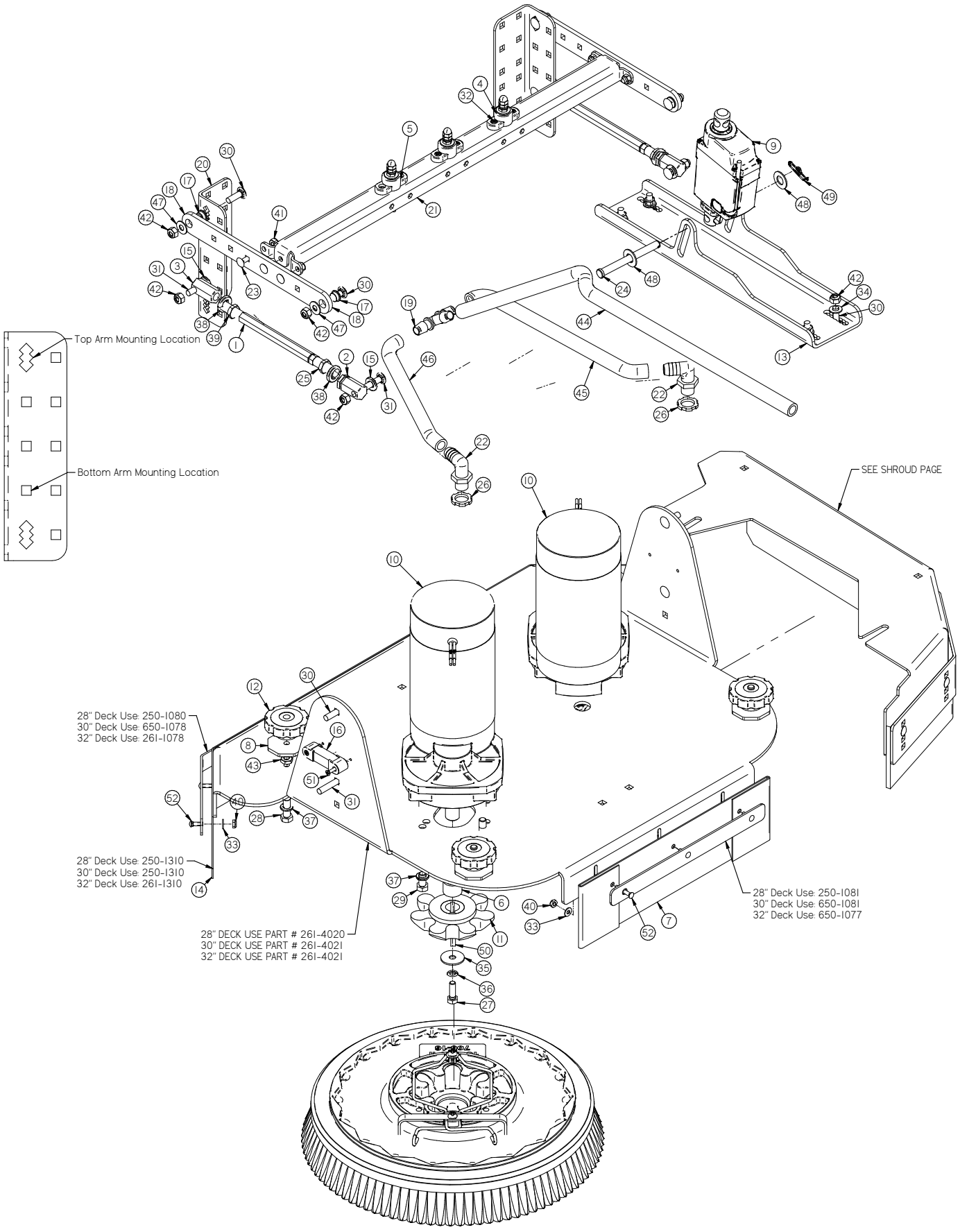
Top Arm Mounting Location
Bottom Arm Mounting Location
SEE SHROUD PAGE
28" Deck Use: 250-1080
30" Deck Use: 650-1078
32" Deck Use: 261-1078
28" Deck Use: 250-1310
30" Deck Use: 250-1310
32" Deck Use: 261-1310
28" DECK USE PART # 261-4020
30" DECK USE PART # 261-4021
32" DECK USE PART # 261-4021
28" Deck Use: 250-1081
30" Deck Use: 650-1081
32" Deck Use: 650-1077

Item	Part No.	Part Description	Qty.
1	10-00	10" ADJUSTABLE LATERAL ARM BODY	1
2	150-9583	ADJUSTABLE ROD END (LH THREAD)	2
3	150-9584	ADJUSTABLE ROD END (RH TREAD)	1
4	175-2700	NEG INSULATOR POST (BLACK)	1
5	175-2710	POS INSULATOR POST (RED)	1
6	175-5005	DRIVER SPACER	1
7	250-1078	26/30 REAR DECK CURTAIN	1
8	250-1184	SHROUD ADJ. KNOB (3/8-16 THREAD)	1
9	260-2210	2-1/2" STROKE ACTUATOR (24V 900Nm)	1
10	260-3111	MOTOR, 24V, 3/4 HP, 270 RPM	2
11	260-5000	BRUSH DRIVER RED HARD COAT (_7-LOBE_)	1
12	260-5786	STAR KNOB, 3/8-16 THREAD	1
13	261-1103	DISK SCRUB DECK BRACKET	1
14	261-1310	32" FRONT DECK CURTAIN	1
15	290-1237	FW BRONZE .75 OD X .375 IDX .125 THK	3
16	300-4030	LEVEL	1
17	370-1247	BUSHING 5/16 X 1/2 X 3/16	2
18	5-124	LATERAL ARM	2
19	5-446	1/2 " PLASTIC BARB TEE	1
20	650-1265	SCRUB ARM BRACKET	1
21	650-9587	LIFT ARM CROSS BAR	1
22	7-248	5/8 BARB TO 1/2 NPT ELBOW	2
23	H- 21801	CB 1/4"- 20 X .75" ZINC	1
24	H-0156759	3/8" X 4" CLEVIS PIN SS	1
25	H-0169629	LH HX JAM .50-20 ZINK	2
26	H-07005	1/2" NPT LOCKNUT	2
27	H-13055	HCS 5/16"- 18 X 1" ZINC	1
28	H-13817	HCS 3/8"- 16 X 2" ZINK	1
29	H-17102	HCS 3/8"-24 X 3/4" ZINC	1
30	H-21811	CB 5/16"- 18 X 1" ZINC	6
31	H-21813	CB 5/16"- 18 X 1-1/2" ZINC	2
32	H-29073	PPH #10-32 X 1" ZINC	1
33	H-33074	FW #10 ID X .5 OD ZINC	2
34	H-33080	FW 5/16 ID X 11/16 OD ZINK	1
35	H-33214	FW .375 ID X 1.25 OD ZINC	1
36	H-33620	LW 5/16" ZINC	1
37	H-33622	LW 3/8" ZINC	2
38	H-33626	LW 1/2" ZINC	3
39	H-36260	HX JAM .50-20 ZINK	1
40	H-37015	NYLOK #10-32 ZINC	2
41	H-37018	NYLOK 1/4"- 20 ZINC	1
42	H-37021	NYLOK 5/16" - 18 ZINC	7
43	H-37026	JNYL 3/8- 16 ZINC	1
44	H-53933	Wire Reinforced Clear PVC 1/2"ID 3/4"OD Tubing	1
45	H-53933	Wire Reinforced Clear PVC 1/2"ID 3/4"OD Tubing	1
46	H-53933	Wire Reinforced Clear PVC 1/2"ID 3/4"OD Tubing	1
47	H-71015	FW 5/16 ID X 3/4 OD ZINC	2
48	H-76065	FW 1/2" NYLON	2
49	H-RUE14	3/8" RUE RING COTTER	1
50	M-0953154	1/4" X 1" KEY	1
51	M-90471A276	FHP #8-32 X 1.0" ZINK	1
52	M-92356A257	CB #10-32 X 5/8" ZINC	2

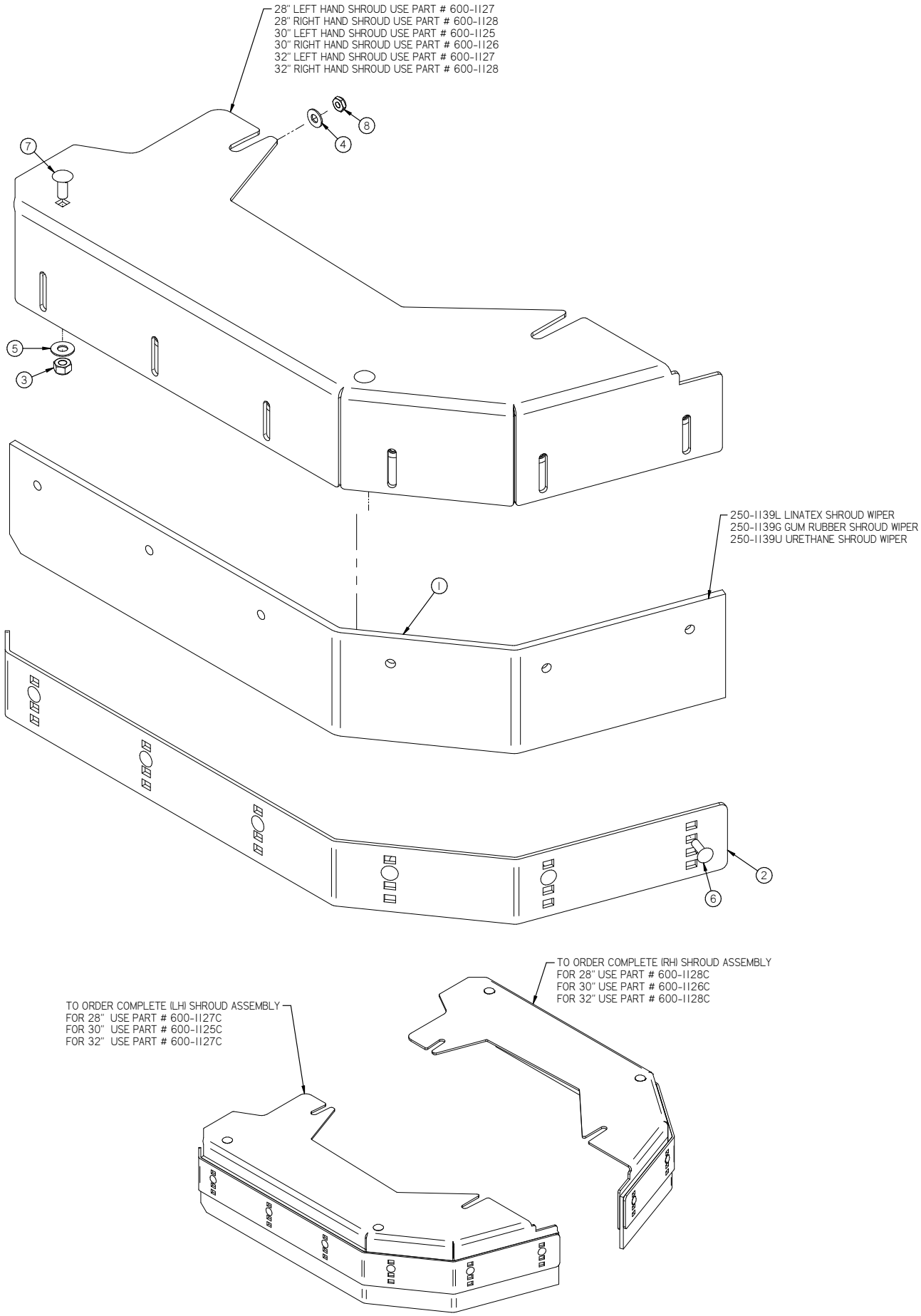
28" LEFT HAND SHROUD USE PART # 600-1127
28" RIGHT HAND SHROUD USE PART # 600-1128
30" LEFT HAND SHROUD USE PART # 600-1125
30" RIGHT HAND SHROUD USE PART # 600-1126
32" LEFT HAND SHROUD USE PART # 600-1127
32" RIGHT HAND SHROUD USE PART # 600-1128
250-1139L LINATEX SHROUD WIPER
250-1139G GUM RUBBER SHROUD WIPER
250-1139U URETHANE SHROUD WIPER
TO ORDER COMPLETE (RH) SHROUD ASSEMBLY
FOR 28" USE PART # 600-1128C
FOR 30" USE PART # 600-1126C
FOR 32" USE PART # 600-1128C
TO ORDER COMPLETE (LH) SHROUD ASSEMBLY
FOR 28" USE PART # 600-1127C
FOR 30" USE PART # 600-1125C
FOR 32" USE PART # 600-1127C
1
2
3
4
5
6
7
8

Item	Part No.	Part Description	Qty.
1	250-1139	SHROUD CURTAIN	1
2	650-1140	SHROUD CURTAIN BAND	1
3	H-70861	NYLOK 5/16" - 18 SS	2
4	H-71013	FW 1/4 ID X 5/8 OD SS	6
5	H-71015	FW 5/16 ID X 3/4 OD SS	2
6	H-74419	CB 1/4"- 20 X .75" SS	6
7	H-74429	CB 5/16"- 18 X 3/4" SS	2
8	H-NJ04C	JNYL 1/4" - 20 SS	6

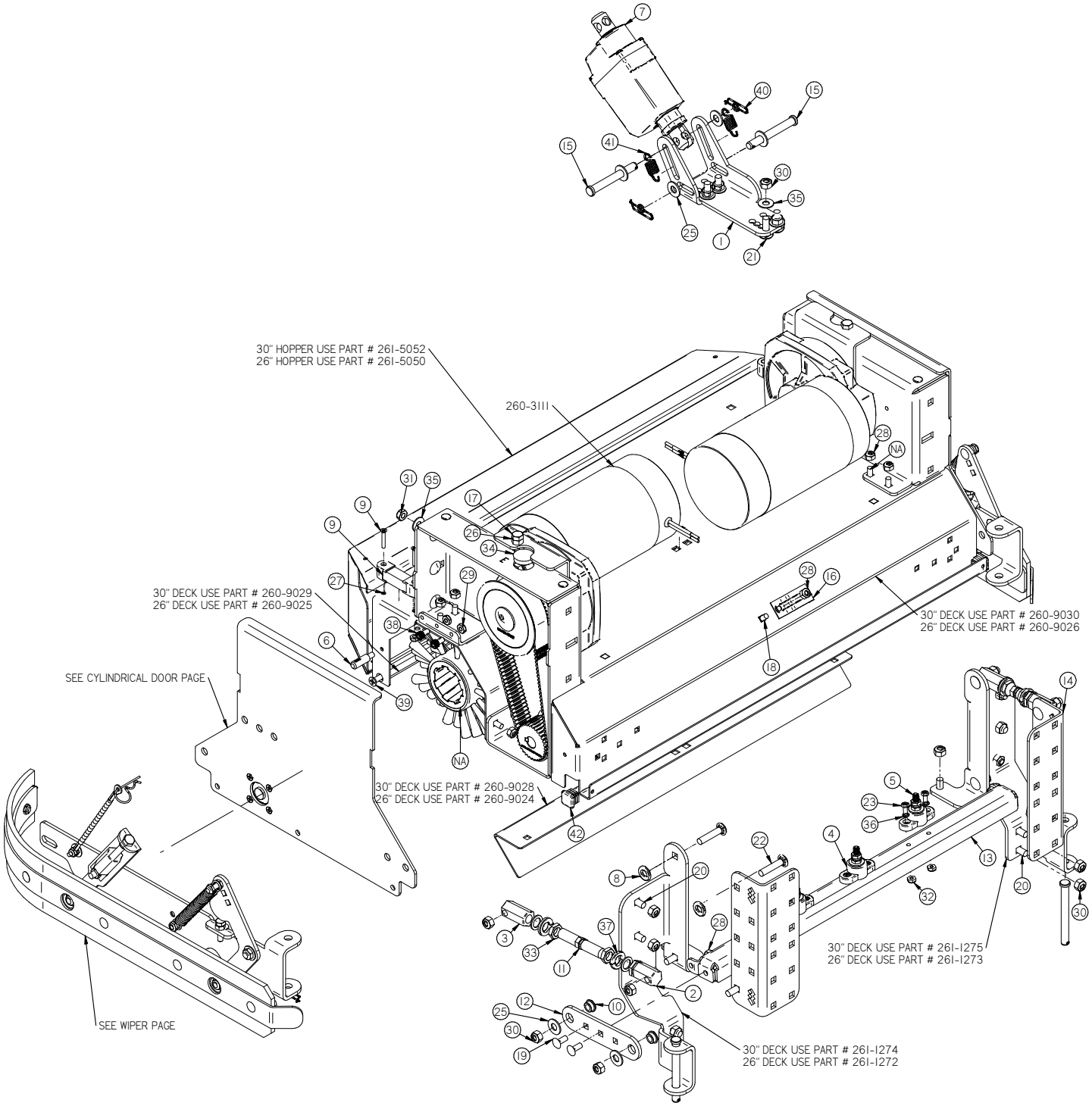
30" HOPPER USE PART # 261-5052
26" HOPPER USE PART # 261-5050
260-3111
30" DECK USE PART # 260-9029
26" DECK USE PART # 260-9025
30" DECK USE PART # 260-9030
26" DECK USE PART # 260-9026
SEE CYLINDRICAL DOOR PAGE
30" DECK USE PART # 260-9028
26" DECK USE PART # 260-9024
30" DECK USE PART # 261-1275
26" DECK USE PART # 261-1273
30" DECK USE PART # 261-1274
26" DECK USE PART # 261-1272
SEE WIPER PAGE

Item	Part No.	Part Description	Qty.
1	150-9006	DECK LIFTING BRACKET	1
2	150-9583	ADJUSTABLE ROD END (LH THREAD)	2
3	150-9584	ADJUSTABLE ROD END (RH TREAD)	2
4	175-2700	NEG INSULATOR POST (BLACK)	1
5	175-2710	POS INSULATOR POST (RED)	1
6	250-0001	RETAINER PIN	1
7	260-2210	2-1/2" STROKE ACTUATOR (24V 900Nm)	1
8	290-1237	FW BRONZE .75 OD X .375 IDX .125 THK	2
9	300-4030	LEVEL	1
10	370-1247	BUSHING 5/16 X 1/2 X 3/16	1
11	4-25	6.25" ADJUSTABLE LATERAL ARM BODY	2
12	600-9585	CYL. LATERAL ARM	1
13	600-9687	LIFT ARM CROSS BAR (CYL)	1
14	650-1265	SCRUB ARM BRACKET	2
15	H-0156756	CLEVIS PIN 3/8" x 3.00"	2
16	H-0701891	3/4in Hose Tube Clamp (1in Dia)	1
17	H-13055	HCS 5/16"- 18 X 1" ZINC	2
18	H-21795	CB 1/4"- 20 X .5" ZINC	1
19	H-21800	CB 1/4"- 20 X 5/8" ZINC	4
20	H-21810	CB 5/16"- 18 X 3/4" ZINC	11
21	H-21811	CB 5/16"- 18 X 1" ZINC	4
22	H-21813	CB 5/16"- 18 X 1-1/2" ZINC	4
23	H-29055	PPH #10-32 X 5/8" ZINC	3
24*	H-29073	PPH #10-32 X 1" ZINC	2
25	H-33082	FW .375 ID X .812 OD ZINC	2
26	H-36104	HN 5/16"- 18 ZINC	1
27	H-37015	NYLOK #10-32 ZINC	3
28	H-37018	NYLOK 1/4"- 20 ZINC	6
29	H-37020	JNYL 1/4" - 20 ZINC	1
30	H-37021	NYLOK 5/16" - 18 ZINC	16
31	H-37023	JNYL 5/16"- 18 ZINC	1
32	H-37176	JNYL #10-32 ZINK	1
33	H-70834	HX JAM .50-20 SS	2
34	H-70889	HOLE PLUG 7/8"	1
35	H-71015	FW 5/16 ID X 3/4 OD ZINC	5
36	H-71059	LW #10, SS	1
37	H-71071	LW 1/2" SS	4
38	H-93201	SHCS .25-20 x .5 SS	1
39	H-94223	FHP 1/4"- 20 X 5/8" ZINC	1
40	H-RUE14	3/8" RUE RING COTTER	2
41	M-9432K75	Spring 1.375 LG X .5 OD X .063 Wire	2
42	M-9565K5	3/4 X 3/4 SQ TUBE PLUG	2

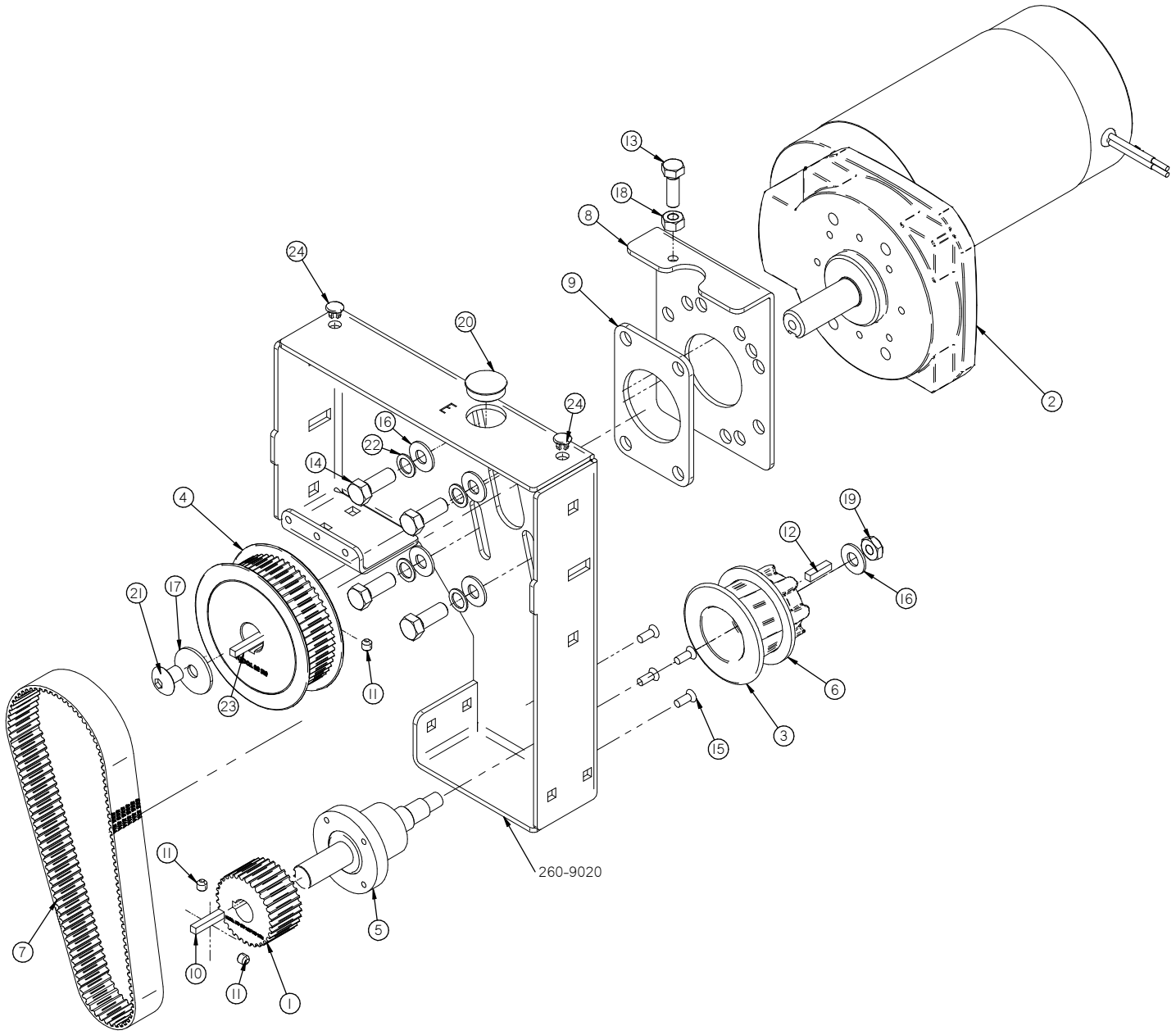
260-9020

Item	Part No.	Part Description	Qty.
1	253-8215	TIMING SPROCKET 32 TOOTH	1
2	260-3111	MOTOR, 24V, 3/4 HP, 270 RPM	1
3	260-8371	7-SPLINE CYL DRIVER (RED HARD COAT)	1
4	264-8225	TIMING SPROCKET 56 TOOTH	1
5	370-8240A	BEARING HOUSING/BEARING	1
6	370-8373	CYLINDRICAL DRIVER SEAL	1
7	650-8230	HI-PERFORMANCE PD PLUS BELT HTD 555-5M	1
8	650-9002	MOTOR ADJ BRACKET	1
9	650-9004	MOTOR SPACER	1
10	H-01125	3/16" X 1" KEY	1
11	H-0135119	SS .25-20 x .25 ZINK	3
12	H-0953152	3/16" X 3/4" KEY	1
13	H-13055	HCS 5/16"- 18 X 1" ZINC	1
14	H-13105	HCS 3/8"- 16 X 1" ZINC	4
15	H-29506	FHP #10-32 X 1/2" ZINC	4
16	H-33082	FW .375 ID X .812 OD ZINC	2
17	H-33214	FW .375 ID X 1.25 OD ZINC	1
18	H-36104	HN 5/16"- 18 ZINC	1
19	H-37126	JNYL 3/8- 24 ZINC	1
20	H-70889	HOLE PLUG 7/8"	1
21	H-73811	BHSCS 3/8"- 16 X 1/2" SS	1
22	H-90895	WASHER, SERRATED BELLEVILLE, 3/8", ZINC	4
23	H-K14320	3/16" X 1 1/4" KEY	1
24	M-9688K123	Plug Hole 5/16"	2

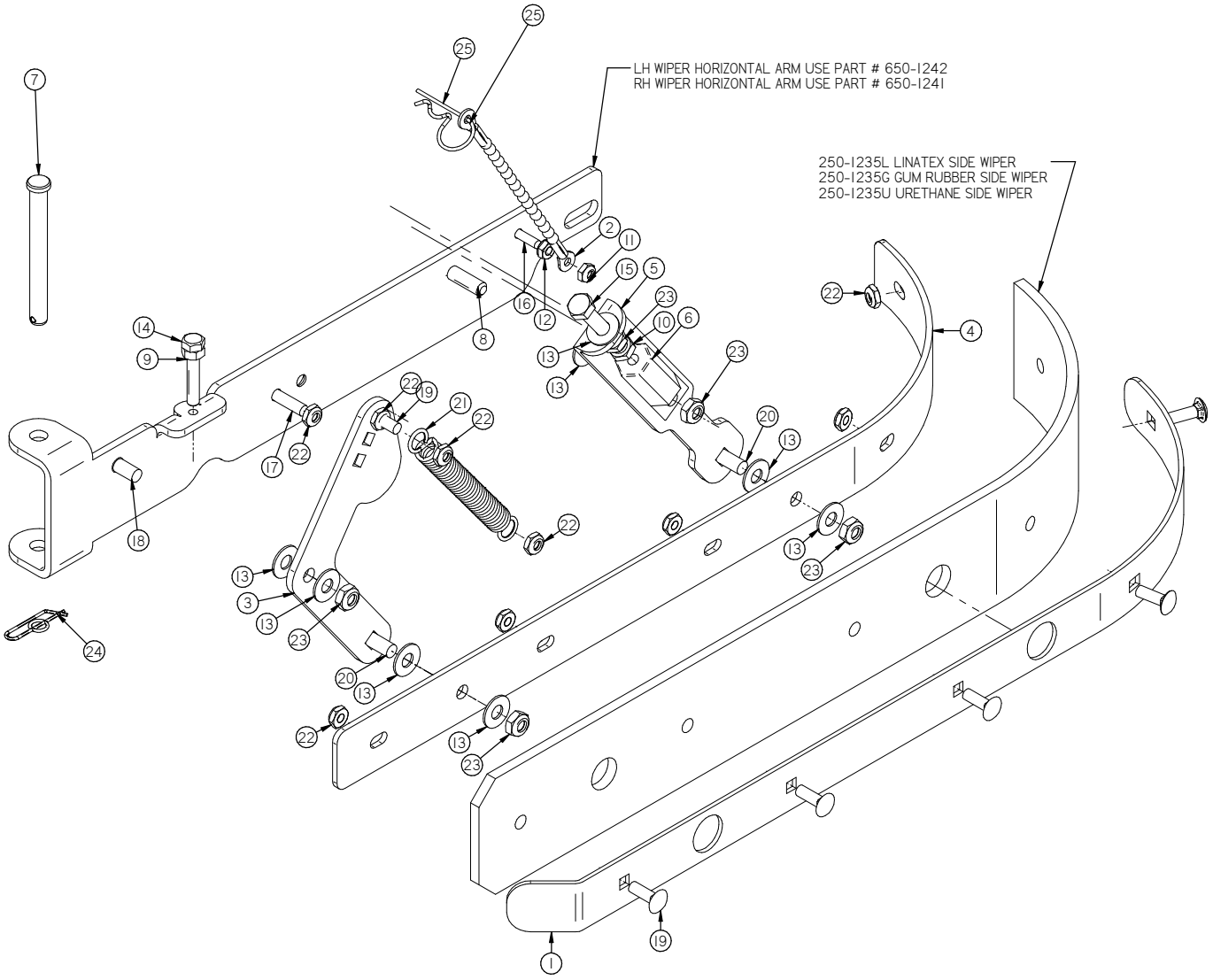
LH WIPER HORIZONTAL ARM USE PART # 650-1242
RH WIPER HORIZONTAL ARM USE PART # 650-1241
250-1235L LINATEX SIDE WIPER
250-1235G GUM RUBBER SIDE WIPER
250-1235U URETHANE SIDE WIPER

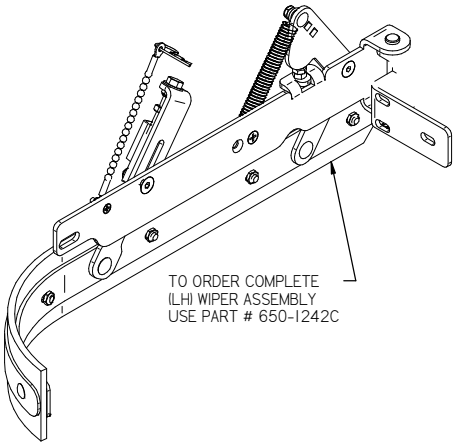
TO ORDER COMPLETE
(LH) WIPER ASSEMBLY
USE PART # 650-1242C

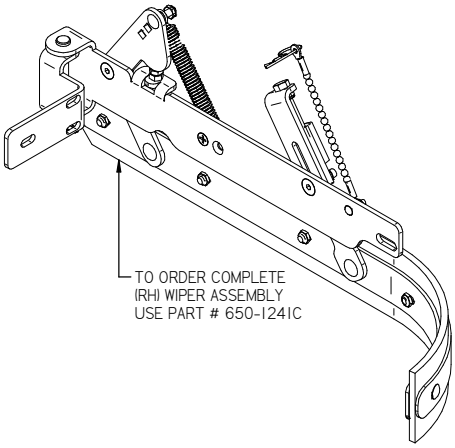
TO ORDER COMPLETE
(RH) WIPER ASSEMBLY
USE PART # 650-1241C

Item	Part No.	Part Description	Qty.
1	250-1236	WIPER BAND	1
2	370-4060	6" LANYARD	1
3	650-1243	SHROUD VERTICAL ARM	1
4	650-1245	SHROUD SIDE	1
5	700-1236	ADJUSTABLE WIPER ARM	1
6	700-1239	ADJUSTABLE ROD END (RH TREAD)	1
7	H-0156758	3/8" X 3-1/2" CLEVIS PIN	1
8	H-24268	FHSCS .312-18 X 1.125 SS	1
9	H-70710	HN 1/4"- 20 SS	1
10	H-70811	JNUT .312-18 SS	1
11	H-70858	NYLOK #10-32 SS	1
12	H-70923	KN #10-32 SS	1
13	H-71015	FW 5/16 ID X 3/4 OD SS	8
14	H-71171	HCS .25-20 X 1.5 FULL THREAD SS	1
15	H-71182	HCS 5/16"- 18 X 2" SS	1
16	H-72684	FHP 10-32 X 3/4" SS	1
17	H-73883	FHP 1/4"- 20 X 1" SS	1
18	H-73907	FHSCS 5/16"- 18 X 3/4" SS	1
19	H-74419	CB 1/4"- 20 X .75" SS	6
20	H-74429	CB 5/16"- 18 X 3/4" SS	2
21	H-96544	SPRING, 4-1/8" LG X 9/16" OD (42E)	1
22	H-NJ04C	JNYL 1/4" - 20 SS	9
23	H-NJ05C	JNYL 5/16"- 18 SS	5
24	H-RUE14	3/8" RUE RING COTTER	1
25	M-92391A044	HAIRPIN, 5/16" - 3/8" X 1-7/16" S/S	1

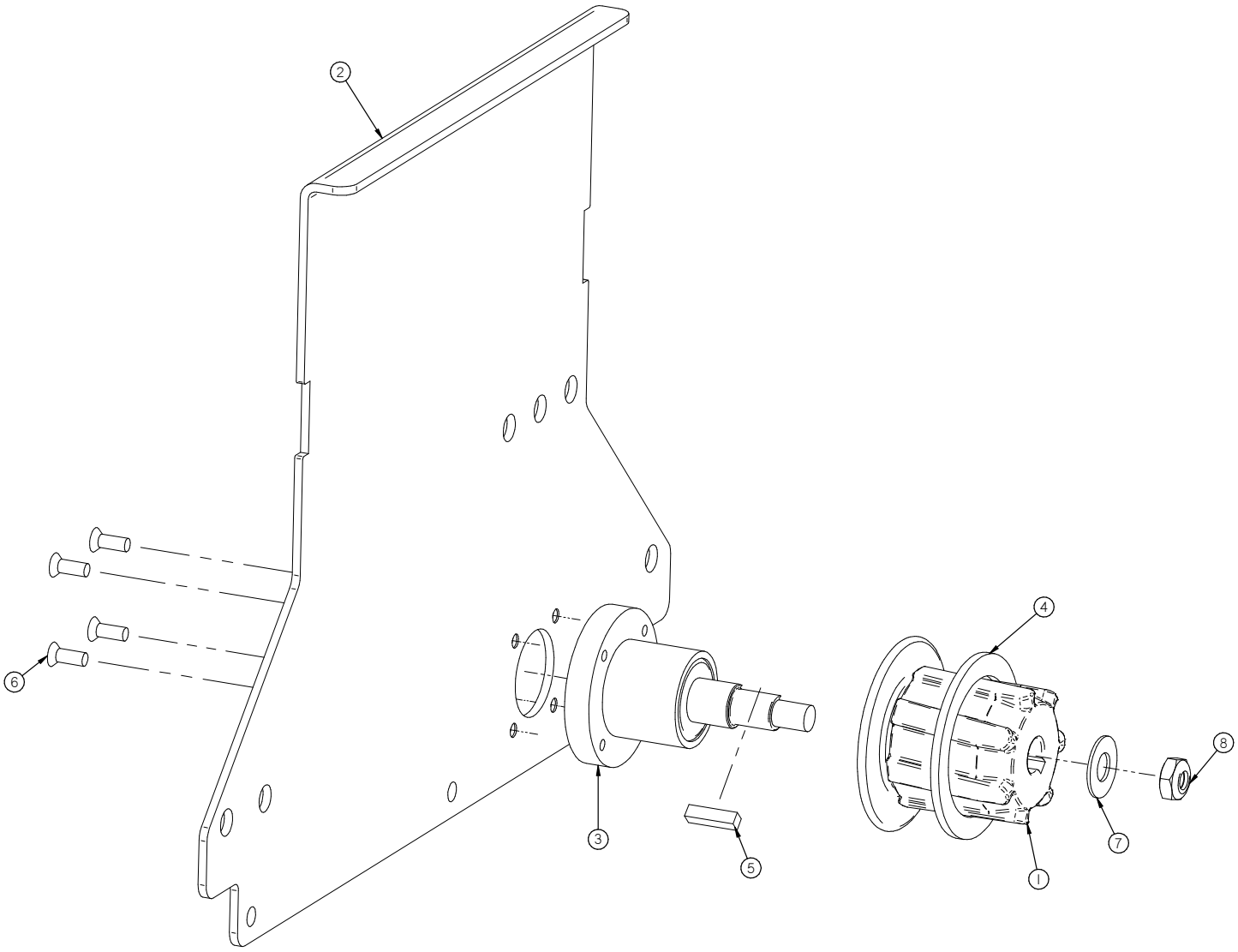
2
6
3
5
4
8
7
1

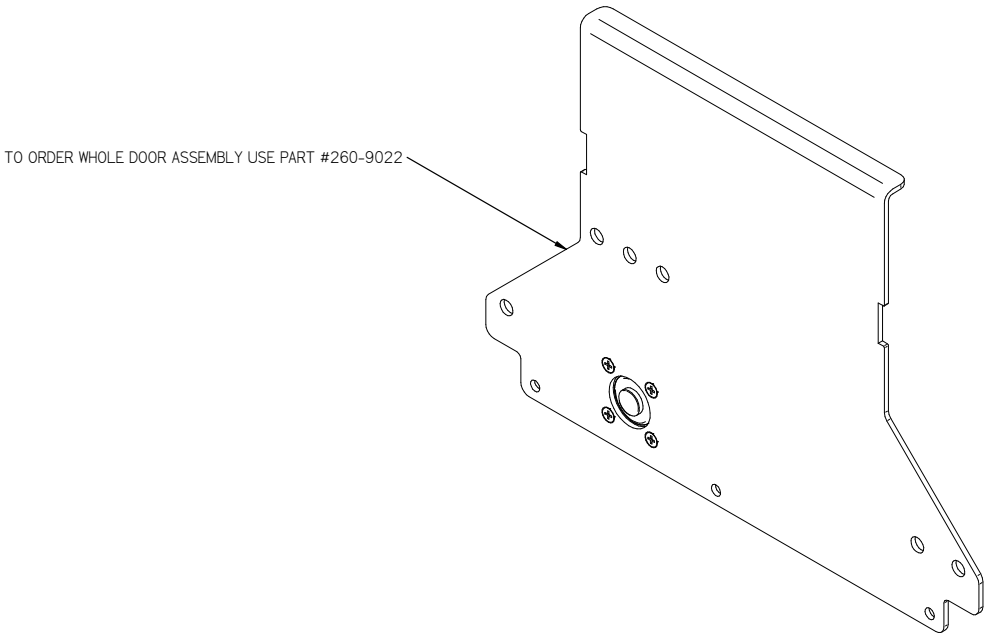
TO ORDER WHOLE DOOR ASSEMBLY USE PART #260-9022

Item	Part No.	Part Description	Qty.
1	260-8373	7-SPLINE CYL IDLER (_PVC_)	1
2	260-9022	DRIVE COVER	1
3	370-8241A	IDLER DRIVE BEARING	1
4	370-8373	CYLINDRICAL DRIVER SEAL	1
5	H-0953152	3/16" X 3/4" KEY	1
6	H-29506	FHP #10-32 X 1/2" ZINC	4
7	H-33008	FW 3/8 ID X 7/8 OD ZINC	1
8	H-37126	JNYL 3/8- 24 ZINC	1

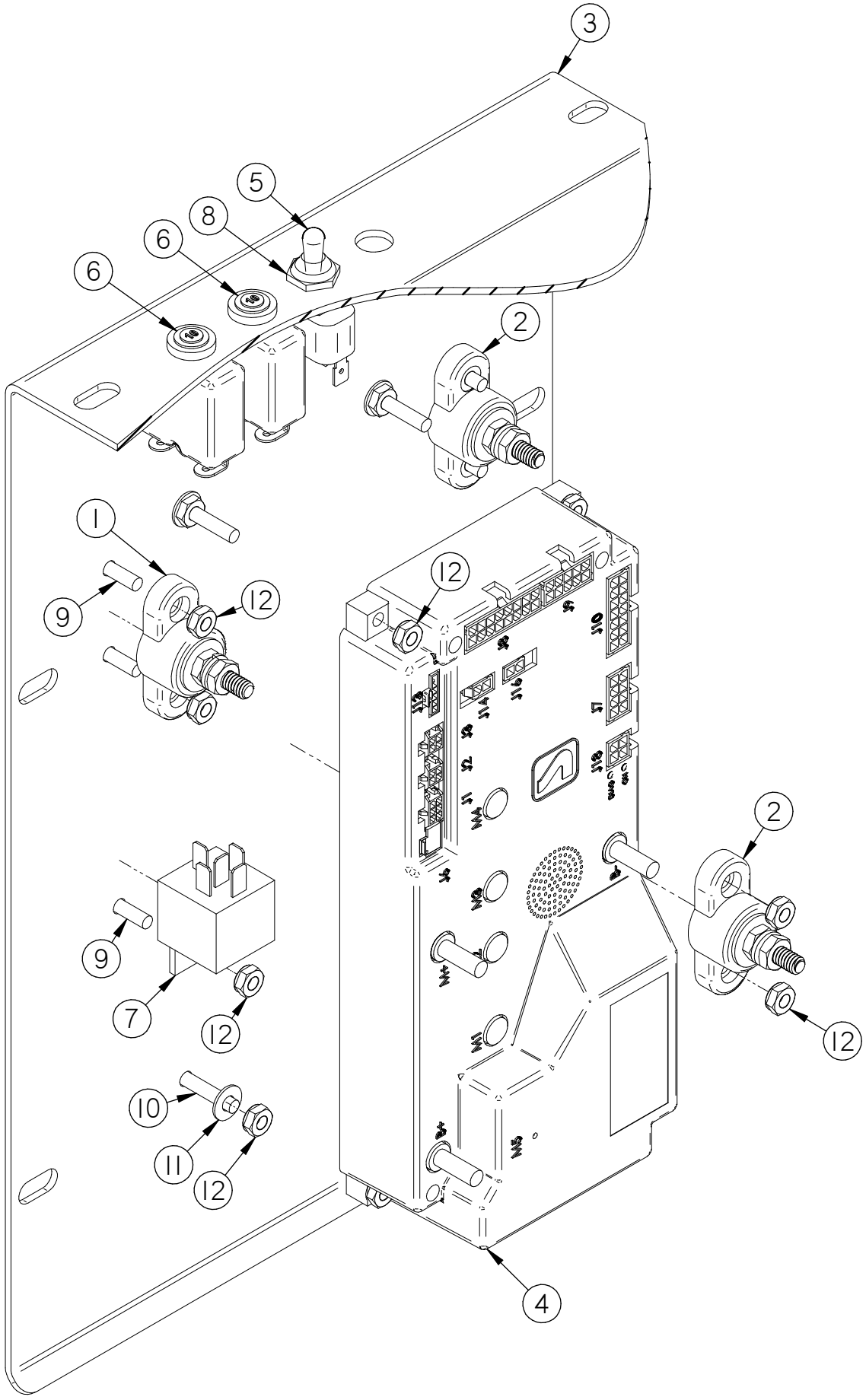
3
5
8
6
6
2
1
9
12
12
2
9
7
12
12
10
11
12
4

Item	Part No.	Part Description	Qty.
1	175-2700	NEG INSULATOR POST (BLACK)	1
2	175-2710	POS INSULATOR POST (RED)	2
3	211-7445	CENTERAL COMMAND	1
4	261-2900	Controller, 24v - 3" Color LCD Orio DES 100a	1
5	370-8920	TOGGLE, ON-OFF SPST	1
6	390-9610	FUSE, RESETTABLE, 10 AMP, 50V DC MAX	2
7	5-293	24V 15 AMP RELAY	1
8	H-11200	PROTECTIVE BOOT, TOGGLE SWITCH, (BLACK)	1
9	H-29055	PPH #10-32 X 5/8" ZINC	7
10	H-29073	PPH #10-32 X 1" ZINC	4
11	H-33074	FW #10 ID X .5 OD ZINC	4
12	H-37408	KN #10-32 ZINC	15

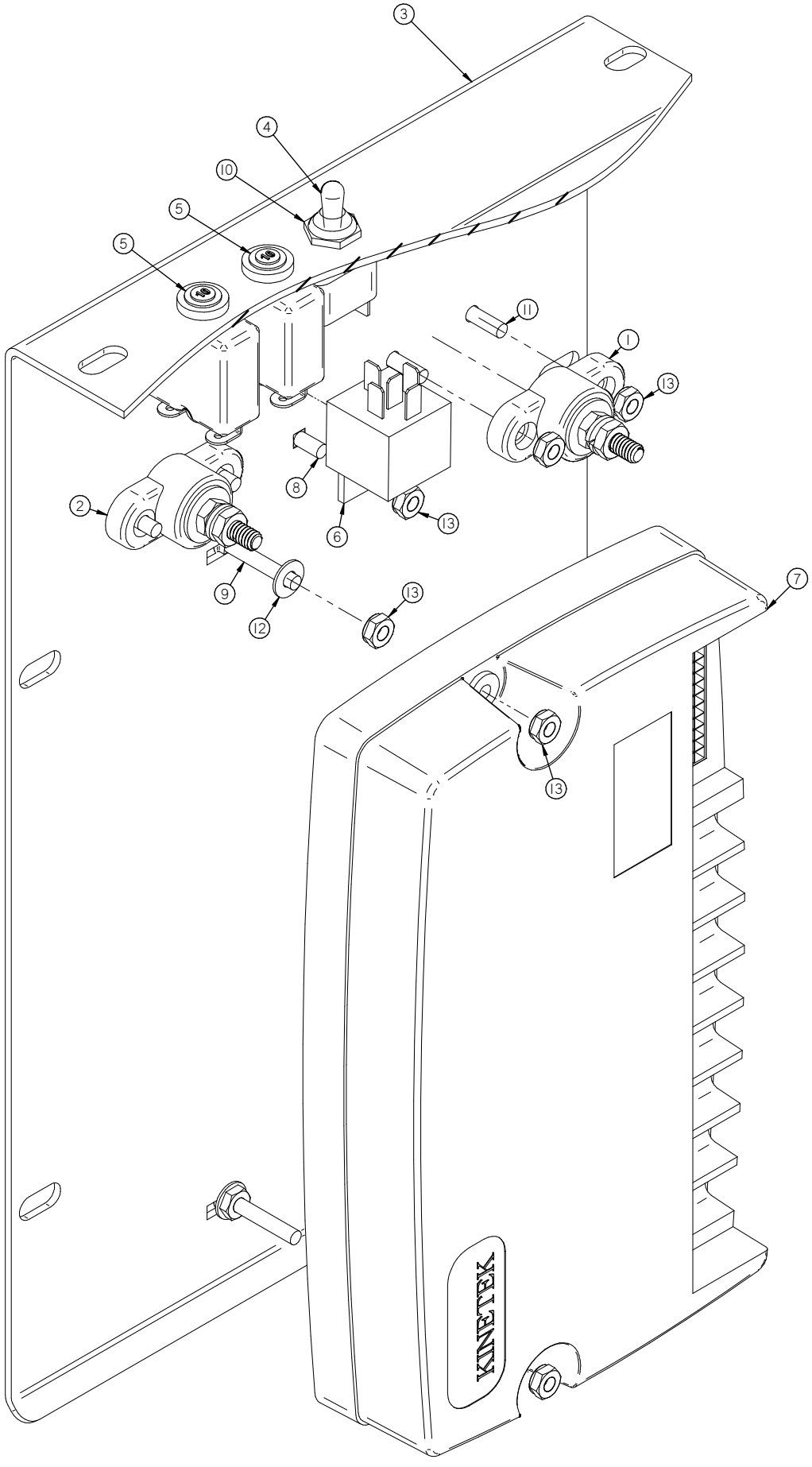
3
4
10
5
5
11
1
13
8
2
6
13
9
12
13
7
13
KINETEK

Item	Part No.	Part Description	Qty.
1	175-2700	NEG INSULATOR POST (BLACK)	1
2	175-2710	POS INSULATOR POST (RED)	1
3	211-9105	TOUCH SCREEN CC	1
4	370-8920	TOGGLE, ON-OFF SPST	1
5	390-9610	FUSE, RESETTABLE, 10 AMP, 50V DC MAX	2
6	5-293	24V 15 AMP RELAY	1
7	650-2890	KINETECK TOUCH SCREEN CONTROLER	1
8	H-0172518	CB #10-32 X 1/2" SS	1
9	H-0172522	CB #10-32 X 1-1/4" ZINC	2
10	H-11200	PROTECTIVE BOOT, TOGGLE SWITCH, (BLACK)	1
11	H-29055	PPH #10-32 X 5/8" ZINC	4
12	H-33074	FW #10 ID X .5 OD ZINC	2
13	H-37408	KN #10-32 ZINC	11

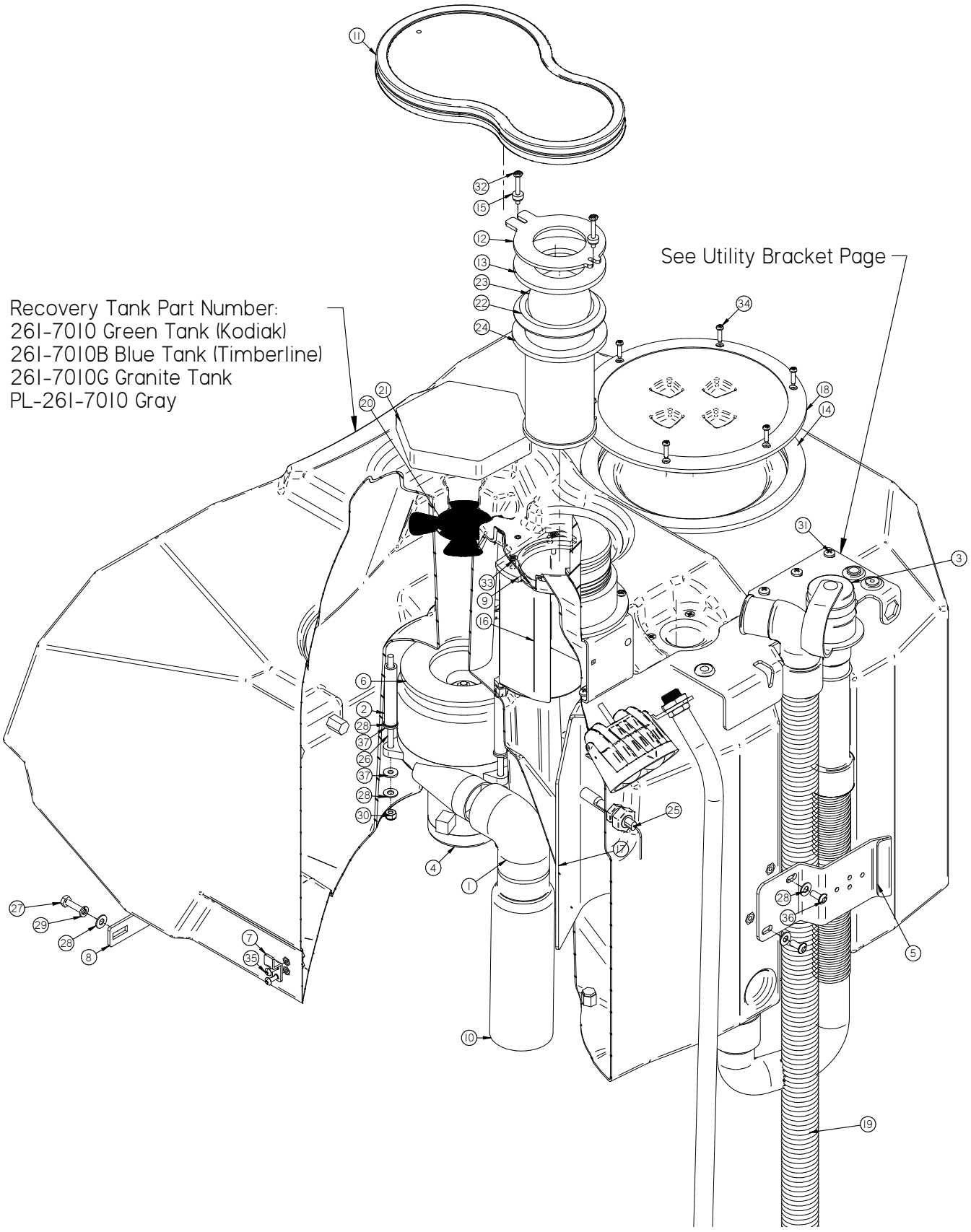
Recovery Tank Part Number:
261-7010 Green Tank (Kodiak)
261-7010B Blue Tank (Timberline)
261-7010G Granite Tank
PL-261-7010 Gray
See Utility Bracket Page

Item	Part No.	Part Description	Qty.
1	150-7291	EXHAUST ELBOW	1
2	175-2600	SPACER, 3.0" LG	2
3	175-7210	RECOVERY DRAIN HOSE	1
4	190-5250	24v VAC MOTOR, 3/4 HP, TANGENTAL	1
5	211-7427	BACK HOSE BRACKET	1
6	211-9723	Vac Motor Gasket	1
7	250-1240	CLIP	1
8	253-1040	TANK STRAP SUPPORT	1
9	260-1133	TANK GASKET	1
10	260-2502	VAC MUFFLER	1
11	260-4048D	REC TANK VAC COVER, GASKET & LANYARD	1
12	260-4080	BALL FLOAT TOP	1
13	260-4103	BALL FLOAT GASKET	1
14	260-4106	8 INCH LID GASKET	1
15	260-4180	8-32 THUMB NUT	2
16	260-7000	BAFFLE	1
17	260-7001	TANK CURTAIN	1
18	260-7425	TANK SCREW ON LID 10"	1
19	261-0118	SQUEEGEE HOSE	1
20	261-4081	VAC SCREEN	1
21	264-4086	VAC BOX FILTER	1
22	264-9111	SCREEN STRAINER	1
23	38-712	OVERFILL SHUTOFF BALL	1
24	38-738	STRAINER GASKET	1
25	5-226	FLOAT SWITCH	1
26	H-10330725	1/4-20 X 5.0" THRD STUD ZINC	3
27	H-13005	HCS 1/4"- 20 X 1" ZINC	1
28	H-33078	FW 1/4 ID X 5/8 OD ZINC	5
29	H-33618	LW 1/4" ZINC	1
30	H-37018	NYLOK 1/4"- 20 ZINC	2
31	H-71893	1/4 X 3/4 SELF TAPPING SCREW	6
32	H-72419	PPH #8-32 X 1-1/4" S/S	2
33	H-72685	FHP 10-32 X 1" SS	4
34	H-72916	PPH SMS #8 X 3/4" SS	6
35	H-94040	BHSCS 10-32 X .50 ZINC	2
36	H-94050	BHSCS 1/4 - 20 X 5/8" ZINC	2
37	M-90130A029	.25" NEOPRENE WASHER	3

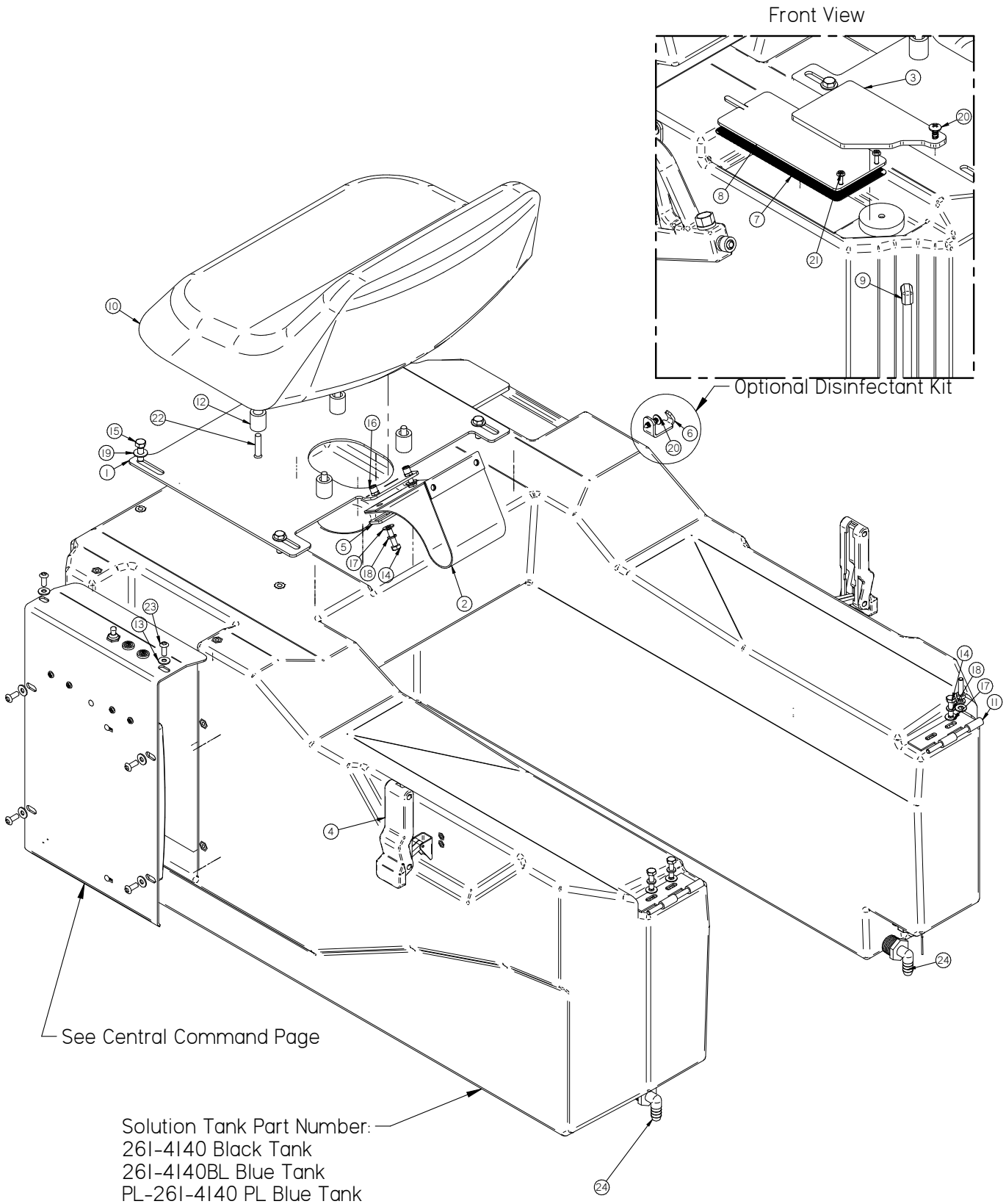
Front View
Optional Disinfectant Kit
See Central Command Page
Solution Tank Part Number:
261-4140 Black Tank
261-4140BL Blue Tank
PL-261-4140 PL Blue Tank

Item	Part No.	Part Description	Qty.
1	211-7424	SEAT SLIDE BRACKET	1
2	211-9125	TANK STRAP, 16" LG X 4" WIDE	1
3	211-9725	SOLUTION FILL TOP LID HALF	1
4	250-1240	LATCH	1
5	253-1040	TANK STRAP SUPPORT	1
6	253-9491	HOOK	1
7	261-1129	SOLUTION FILL SCREEN SHORT	1
8	261-1131	SOLUTION FILL CURTAIN SHORT	1
9	290-4149	1/4" NPT X 1/4" BARB X 90 DEG	1
10	500-1430	SMALL SEAT	1
11	600-1220	4" SS HINGE	1
12	700-0011	CYLINDRICAL ACTUATOR SPACER	4
13	H-00283	FW 1/4" NYLON	6
14	H-13005	HCS 1/4"- 20 X 1" ZINC	10
15	H-13055	HCS 5/16"- 18 X 1" ZINC	4
16	H-250HCN	HCN 1/4"-20	2
17	H-33078	FW 1/4 ID X 5/8 OD ZINC	10
18	H-33618	LW 1/4" ZINC	10
19	H-71015	FW 5/16 ID X 3/4 OD ZINC	4
20	H-71894	#14 X 1" SELF TAPPING SCREW SS	2
21	H-72398	PPH #8-32 X 1/2" S/S	1
22	H-73910	FHSCS 5/16"- 18 X 1-1/2" SS	1
23	H-94050	BHSCS 1/4 - 20 X 5/8" ZINC	6
24	M-5463K516	ELBOW, NYLON, 3/4" MALE NPT X 1/2" BARB	2

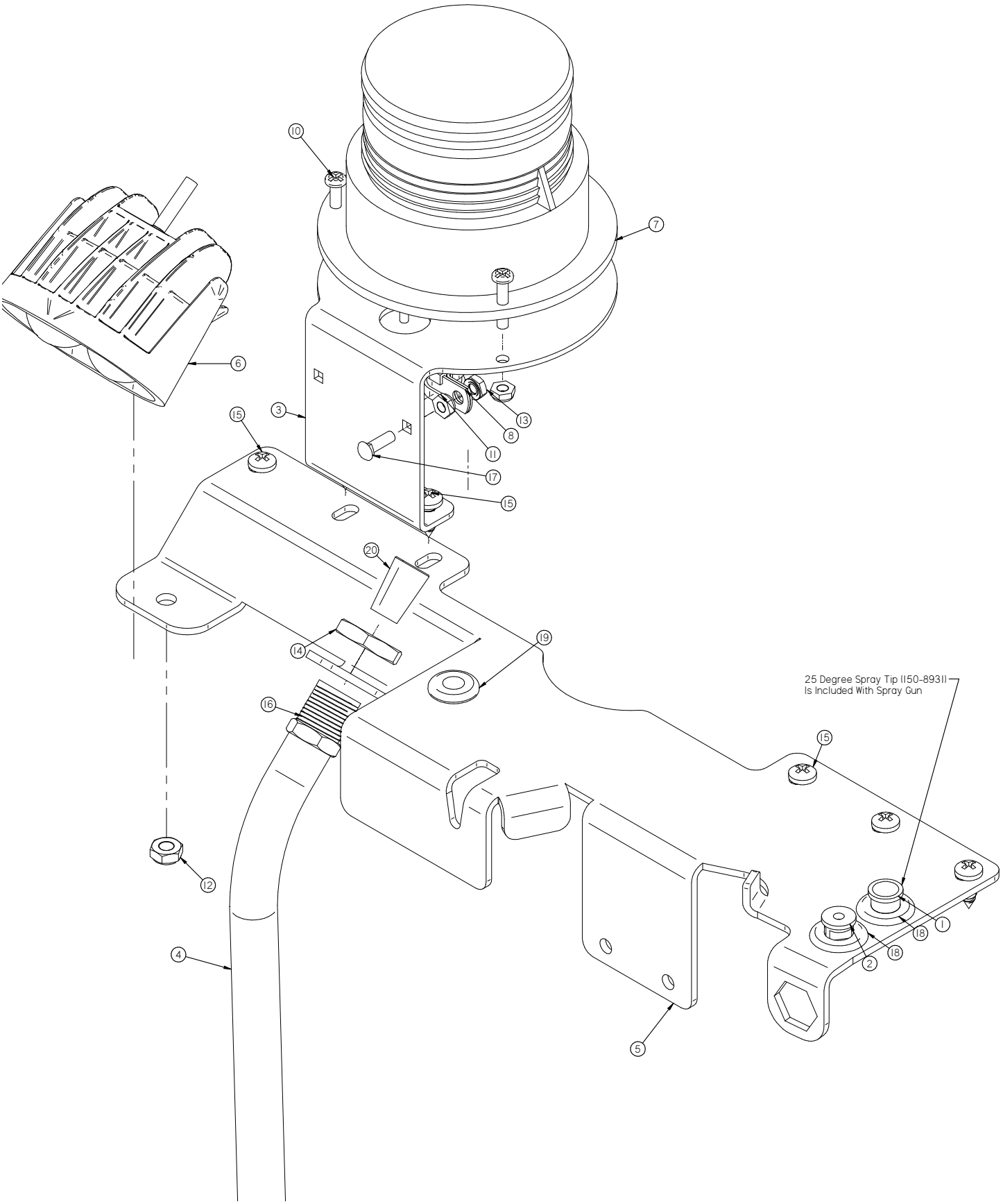
25 Degree Spray Tip (150-893II)
Is Included With Spray Gun

Item	Part No.	Part Description	Qty.
1	150-8930	0 Degree Spray Tip	1
2	150-8932	40 Degree Spray Tip	1
3	211-9709	Strobe Light Bracket	1
4	261-1371	SIGHT TUBE	1
5	261-9127	REAR TANK BRACKET	1
6	349-2910	BLUE WARNING LIGHT	1
7	8-293	STROBE LIGHT	1
8	H-0127290	1/2" LOOP CLAMP	1
9*	H-13051	HCS 5/16"- 18 X 1/2" ZINC	1
10	H-29073	PPH #10-32 X 1" ZINC	3
11	H-37015	NYLOK #10-32 ZINC	4
12	H-37023	JNYL 5/16"- 18 ZINC	1
13	H-37408	KN #10-32 ZINC	1
14	H-68600	1/2" NPT BRASS NUT	1
15	H-71893	1/4 X 3/4 SELF TAPPING SCREW	6
16	M-5346K25	1/2 NPT X 1/2 BRASS BARBED HOSE FITTING	1
17	M-92356A257	CB #10-32 X 5/8" ZINC	1
18	M-9307K22	GROMMET, RUBBER 3/8 ID X 7/8 OD X 5/16 TH.	2
19	M-9307K23	GROMMET .625 DIAMETER HOLE .125 THICK PANEL	1
20	M-9545K114	17/32" to 39/64" ID Hole Plug	1

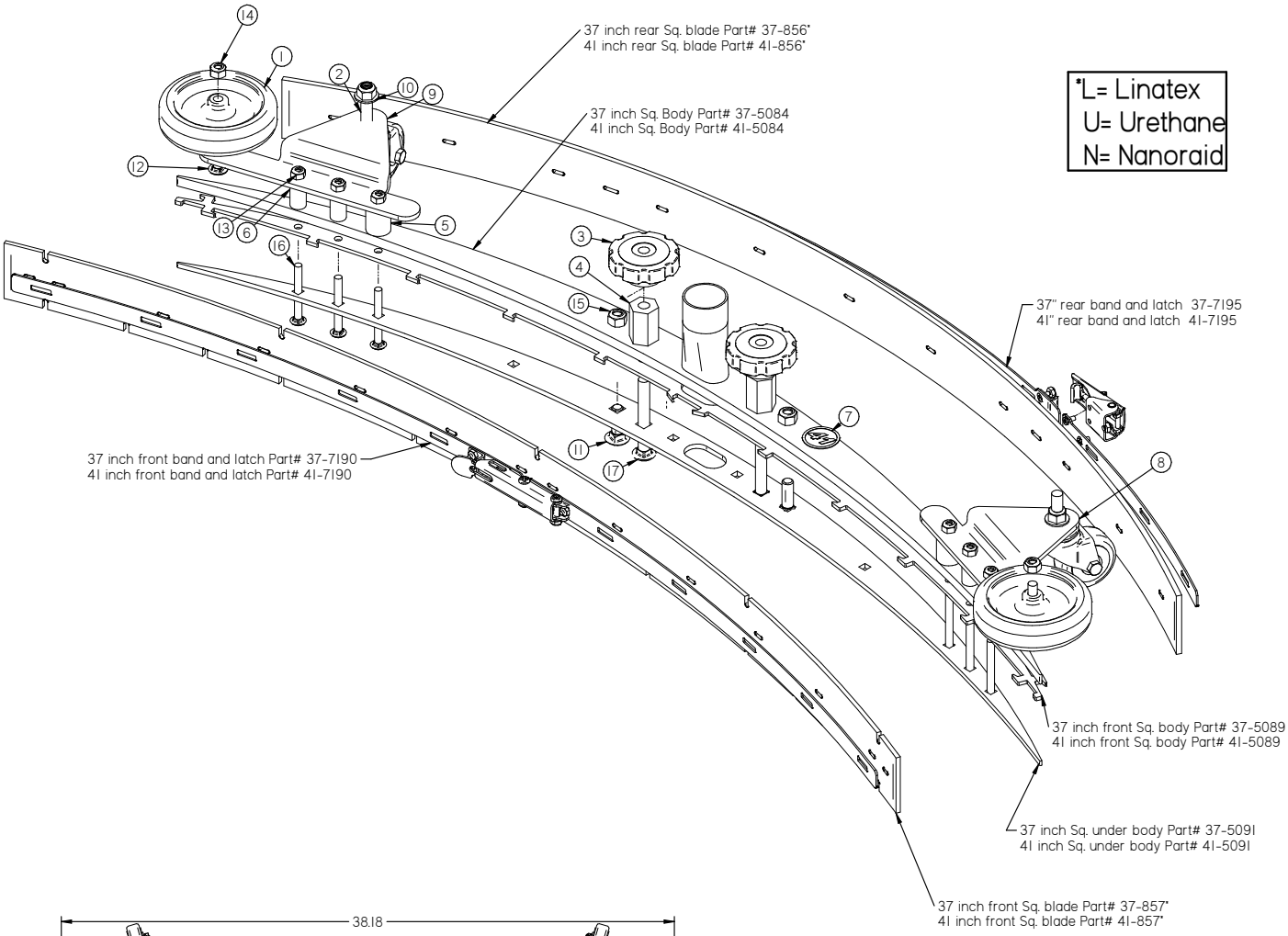

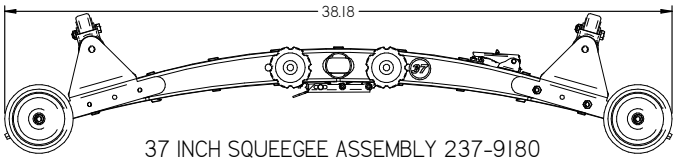

37 INCH SQUEEGEE ASSEMBLY 237-9180

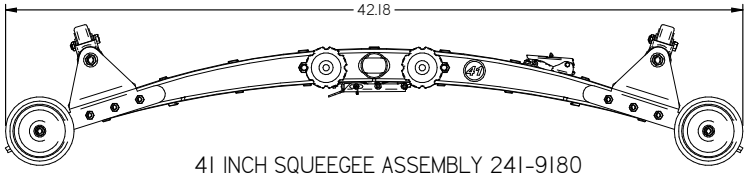

41 INCH SQUEEGEE ASSEMBLY 241-9180

Item	Part No.	Part Description	Qty.
1	150-7600	4" SIDE WHEEL (GREY)	2
2	253-7570	CASTER	2
3	260-5786	STAR KNOB, 3/8-16 THREAD	2
4	35-8460	STANDOFF, 1.5"	2
5	37-0007	SQUEEGEE ROLLER SPACER	2
6	37-0008	SQUEEGEE ROLLER SPACER	3
7	41-1600	41 inch sticker	1
8	45-7183	SQUEEGE CASTER BRACKET (LH)	1
9	45-7184	SQUEEGE CASTER BRACKET (RH)	1
10	H-0129152A	FLANGED NUT 3/8-16	2
11	H-21818	CB 3/8-16 X 1 1/4 ZINK	2
12	H-21860	CB 5/16"- 18 X 1-3/4" ZINC	2
13	H-37018	NYLOK 1/4"- 20 ZINC	6
14	H-37021	NYLOK 5/16" - 18 ZINC	2
15	H-37025	NYLOK 3/8"-16 ZINC	2
16	H-74397	CB 1/4"- 20 X 2-1/4" SS	6
17	H-74441	CB 3/8"- 16 X 3.0" SS	2

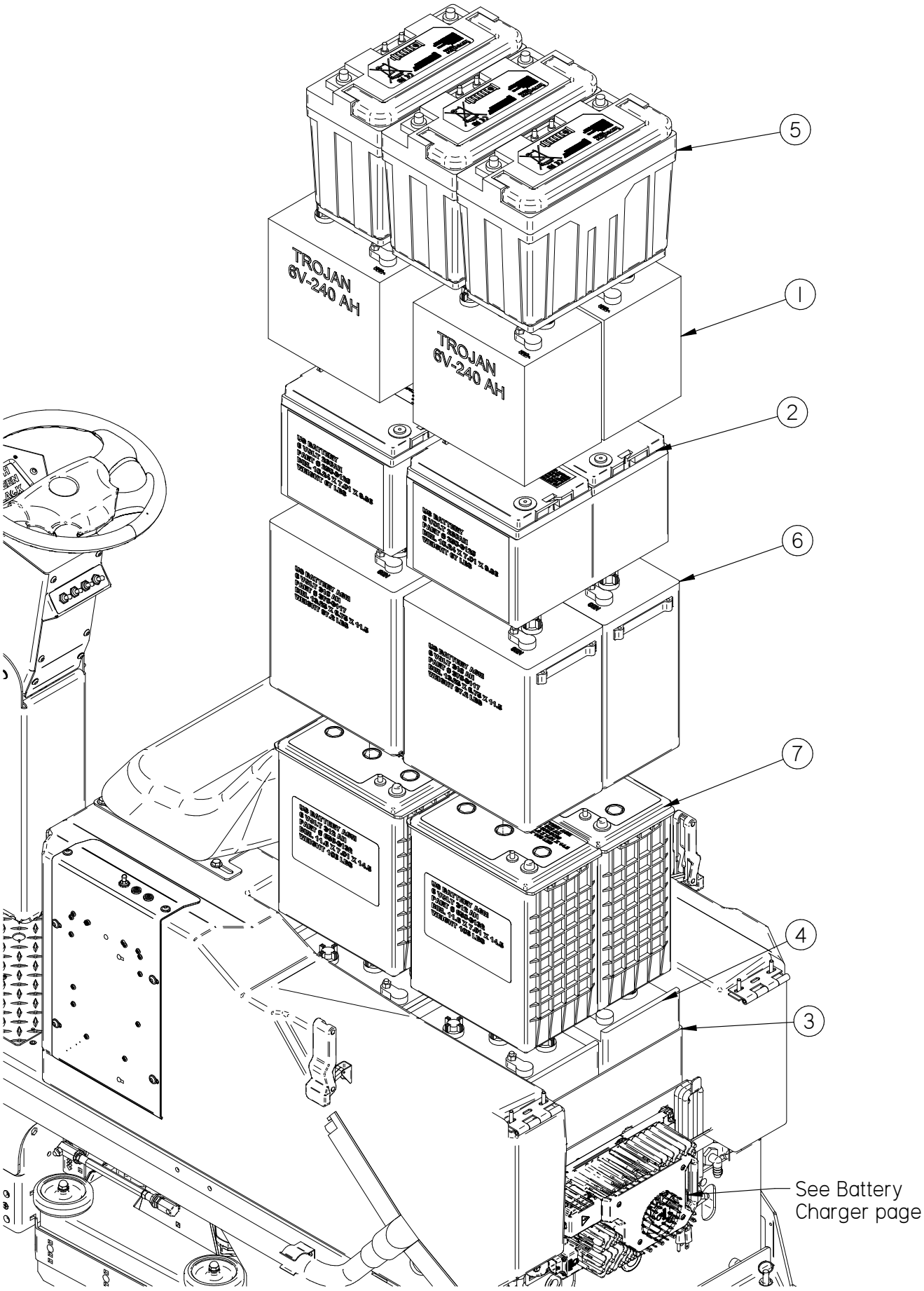
5
1
2
6
7
4
3
TROJAN
6V-240 AH
TROJAN
6V-240 AH
See Battery
Charger page

Item	Part No.	Part Description	Qty.
1	250-2113	BATTERY 6 V 245 AH	1
2	250-3120	Battery 6v 260AH (US AGM)	1
3	253-1480	MAGNUM SERIES BATTERY TRAY	1
4	253-2112	BATTERY 6 VOLT 360 AH	1
5	260-3210	INVENTUS LITHIUM ION BATTERY 24V 90ah	1
6	370-3117	BATTERY, 6-V, 310 AH	1
7	370-3120	6V/312 AMP HR AGM US BATTERY	1

WHICH BATTERY CHARGER TO USE WITH BATTERY SELECTION			
Battery Part Number	Description	Standard/Option	On-Board Charger
250-2113	240AH 6V TROJAN WET	Standard	175-2460
370-3117	310AH 6V US-BATTERY WET	Optional	175-2460
250-3120	250AH 6V US-BATTERY AGM	Optional	175-2460
370-3120	312AH 6V US-BATTERY AGM	Optional	175-2460
260-3210	90AH 24V LITHIUM	Optional	264-2460
253-2112	360AH 6V TROJAN WET	Optionaal	264-2460

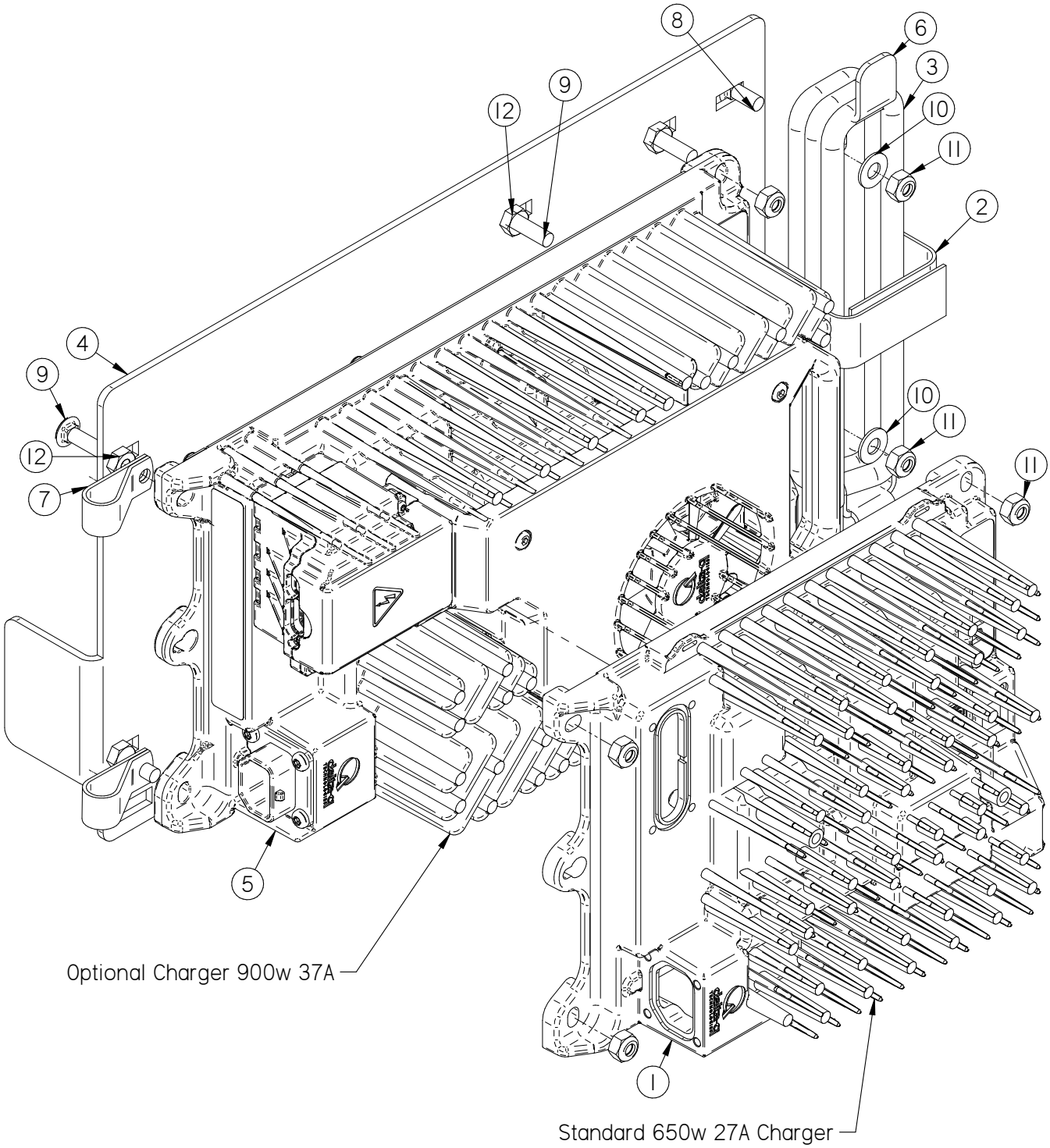
8
6
3
9
12
10
11
2
4
9
10
11
12
11
7
5
Optional Charger 900w 37A
1
Standard 650w 27A Charger

Item	Part No.	Part Description	Qty.
1	175-2460D	DELTAQ ON-BOARD CHARGER 24V 650W 27A	1
2	175-2462	VELCRO STRAP	1
3	253-2470	POWER CORD	1
4	261-9698	BACK CHARGER BRACKET	1
5	264-2460	DELTAQ ON-BOARD CHARGER 24V 900W 37A	1
6	600-4042	CORD WRAP	1
7	H-0127290	RUBBER LOOP CLAMP, 1/2"	2
8	H-21800	CB 1/4"- 20 X 5/8" ZINC	2
9	H-21802	CB 1/4"- 20 X 1.0" ZINC	6
10	H-33078	FW 1/4 ID X 5/8 OD ZINC	2
11	H-37018	NYLOK 1/4"- 20 ZINC	8
12	H-37410	KN 1/4-20 ZINC	6

SCHEMATIC

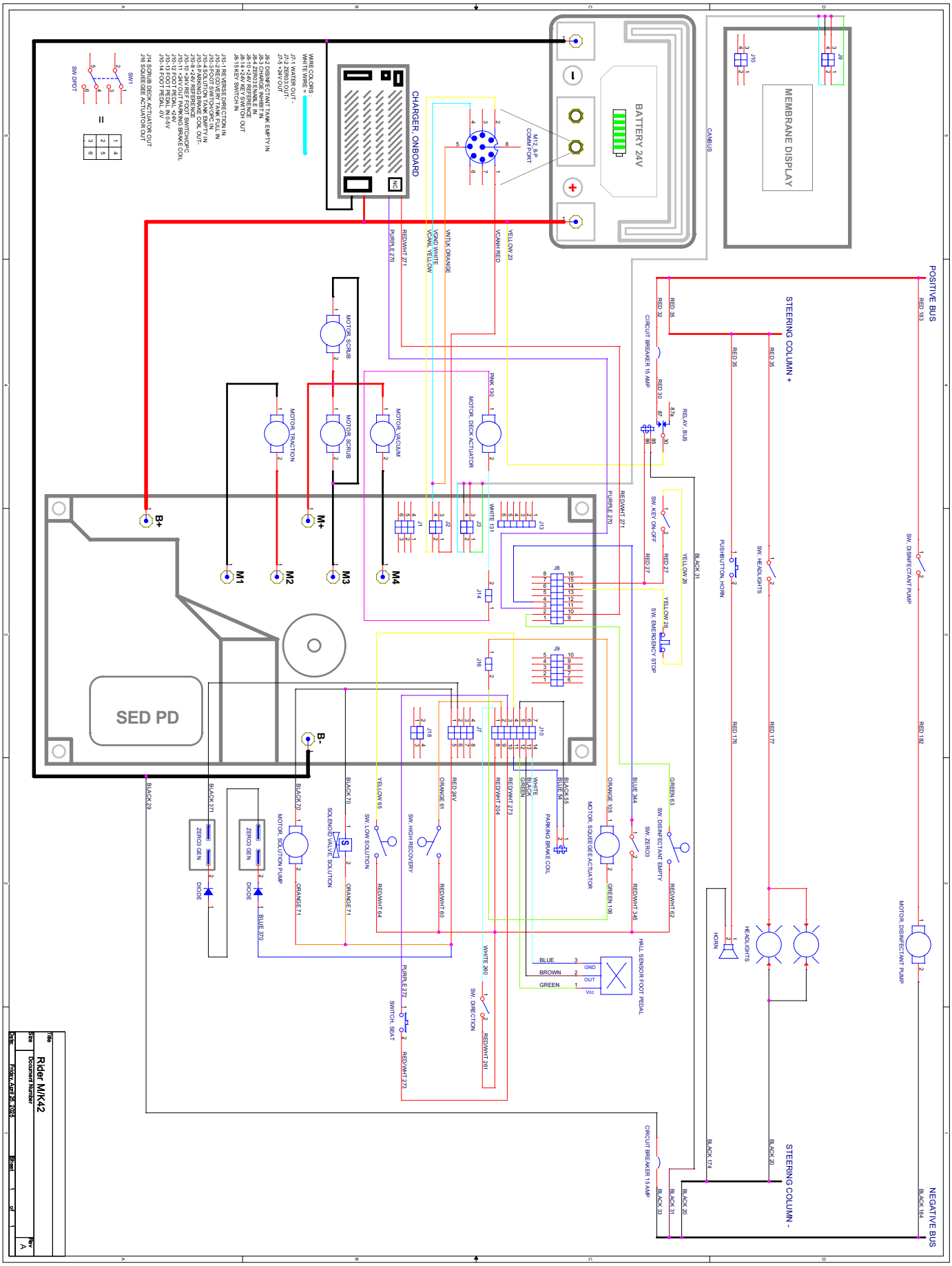

BATTERY 24V
MEMBRANE DISPLAY
CHARGER, ONBOARD
SED PD
POSITIVE BUS
NEGATIVE BUS
STEERING COLUMN +
STEERING COLUMN -
M1
M2
M3
M4
B+
B-
M+
Rider M/K42

NOTICE
THE ## IN THE DISK COLUMN DENOTES DESK PAD SIZE: 14", 15", 16"

ROUND DISK BRUSHES		
BRUSHES	**DISK**	**LEVEL**
MIDI GRIT	706-##C	MEDIUM
LIGHT GRIT	706-##PS	MODERATE
NYLON	706-##N	LIGHT
PAD DRIVER	706-##D	
PAD DRIVER PAD RETAINER	#40-433	
PAD DRIVER SPRING CLIP	#40-423	

NOTICE
THE ## IN THE DISK COLUMN DENOTES DESK PAD SIZE: 14", 15", 16"

ROUND DISK PADS			
DISK PADS	**DISK**	**LEVEL**	**COLOR**
SUPER BLACK	##-422BB	VERY HIGH	BLACK
BLACK	##-422B	HIGH	BLACK
BROWN	##-422BR	HIGH	BROWN
GREEN	##-422G	MEDIUM	GREEN
BLUE	##-422BL	MODERATE	BLUE
RED	##-422R	MODERATE	RED
WHITE	##-422W	LIGHT	WHITE

CYLINDRICAL BRUSHES			
BRUSHES	**MODEL 26"**	**MODEL 30"**	**LEVEL**
MIDI GRIT	75-246C	75-286C	MEIDUM
LIGHT GRIT	75-246PS	75-286PS	MODERATE
NYLON	75-246N	75-286N	LIGHT

SQUEEGEE BLADE KITS & COMPLETE SQUEEGEE ASSEMBLIES:

SQUEEGEE SIZE	24" DECK	26" DECK	28" DECK	30" DECK	32" DECK
37" Squeegee	Standard	Standard	Standard	Optional	Optional
41" Squeegee	Optional	Optional	Optional	Standard	Standard

SQUEEGEE SIZE	LINATEX BLADE KIT	URETHANE BLADE KIT	NANORADE BLADE KIT	COMPLETE SQUEEGEE ASSEMBLIES
37" Squeegee	237-770L	237-770U	237-756N	237-7180
41" Squeegee	241-770L	241-770U	241-756N	241-7180

SQUEEGEE MATERIAL:	USED FOR:
LINATEX	Provides best wear and tear resistance. Not designed for use with harsh chemicals.
URETHANE	Provides best resistance when dealing with harsh chemicals, oils, fuels, etc.
GUM	Provides best drying performance on rough/ grouted floor types by sealing over irregularities. Short life.
NANORADE	Increased durability, optimal water pick up and reduced friction.

NOTICE

Squeegee blade kits include (1) Rear Blade, (1) Front Blade, and (2) Caster Wheels with hardware.

NOTICE

Squeegee Assemblies (complete) listed above all come with Linatex blades.

NOTICE

Size is denoted by label on top squeegee.

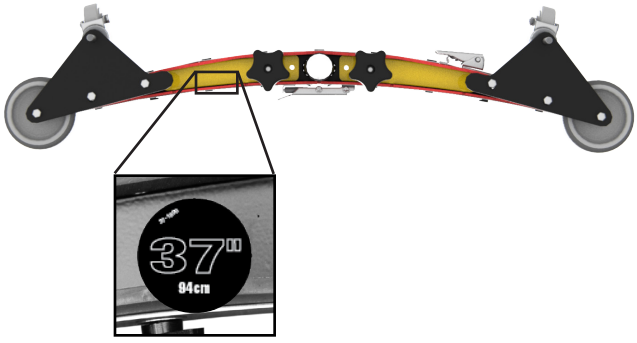

BLANK

THIS PAGE WAS INTENTIONALLY LEFT BLANK



www.timberlineclean.com
1711 South Street
Racine, WI 53404 (USA)
1-855-965-0011
© 2023 RPS Corporation

V26.322
TL-RIDER-M-V2.-P-EN